NOTICE:
This drawing embodies proprietary data and the design of a product originated by Rosán, Inc. and/or Rosán Engineering Corp. at their own expense and by the use of their own facilities, and all product design, manufacturing, reproduction, use and sale rights regarding same are expressly reserved. It is submitted for a specific purpose, and the recipient agrees by accepting this drawing not to supply or disclose any information regarding it to any unauthorized person, or to incorporate in other projects any special features peculiar to this design. All patent rights hereto are expressly reserved by Rosán, Inc. and/or Rosán Engineering Corp., Newport Beach, California.

DWG NUMBER
SRM( )( )
SERIES
INSP - INSTL

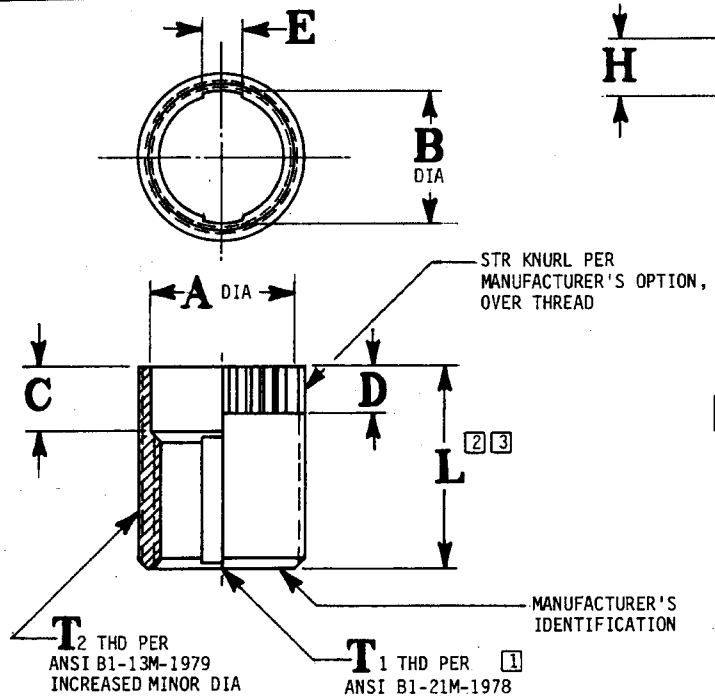

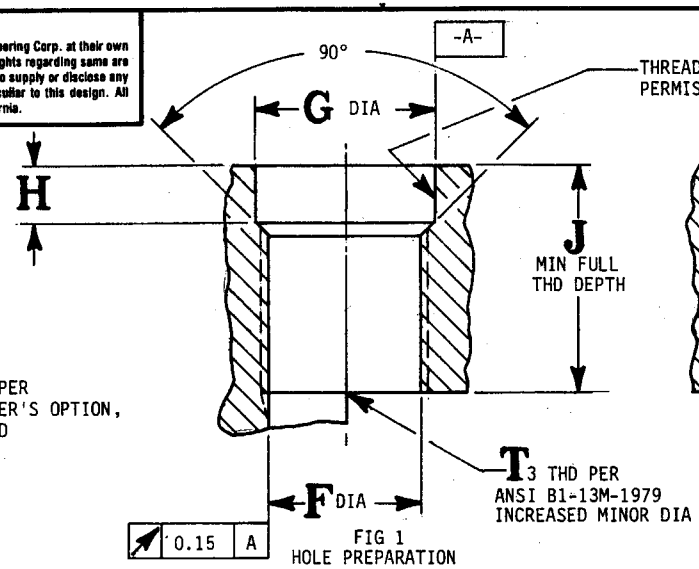

FIG 1
HOLE PREPARATION

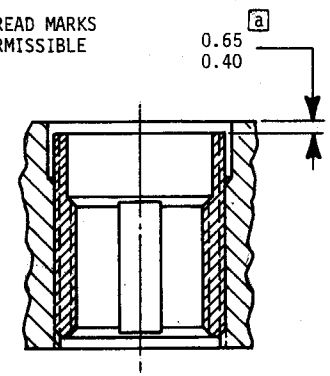

FIG 2
SLIMSERT INSERT
WRENCHED IN

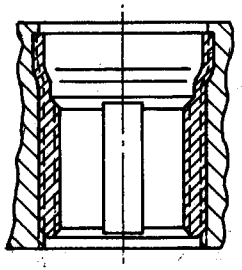

FIG 3
SLIMSERT INSERT
INSTALLED

NOTES: UNLESS OTHERWISE SPECIFIED

1 TOLERANCE CLASS:
-4H6H FOR ≤ MJ5x0.8, 4H5H FOR > MJ5x0.8

2 PART NUMBER EXAMPLE:

SRM 0407 B

METRIC SLIMSERT
INT THD SIZE AND PITCH

LENGTH CODE 3

3 DIRECTION FOR "L" LENGTH DETERMINATION (SEE TABLE I).

4. DIMENSIONS APPLY BEFORE ADDITION OF SOLID FILM LUBE.

5 WEIGHTS APPROXIMATIVE, CALCULATED WITH A DENSITY OF 7.93 Kg/dm^3.

INSTALLATION PROCEDURE

a THE SLIMSERT IS WRENCHED INTO THE PARENT MATERIAL TO DEPTH SHOWN IN FIG 2 WITH WRENCH PER TABLE II.

b. SWAGE THE COLLAR OF THE INSERT OUT UNTIL IT PRESSES INTO THE WALL OF THE COUNTERBORE "G" DIA (SEE FIGURE 3), USING SWAGE TOOL PER TABLE II.

c. THE SLIMSERT IS INSTALLED WHEN THE SHOULDER OF THE SWAGE TOOL BOTTOMS ON THE SURFACE OF THE PARENT MATERIAL.

d. FOR INSTALLATION INTO HARD MATERIALS CONTACT ROSAN ENGINEERING DEPARTMENT.

TABLE I

MINIMUM TENSILE STRENGTH OF SCREW CONNECTION	SHEAR STRENGTH OF PARENT MATERIAL	
	A	B
900 MPa	220 MPa	170 MPa
1100 MPa	260 MPa	200 MPa

LTR	CHANGES	DATE
E	REVISED & REDRAWN	81-09-08 F.M.

METRIC — THIRD ANGLE PROJECTION

UNLESS OTHERWISE SPECIFIED
ALL DIMENSIONS ARE IN mm
TOLERANCE
DECIMALS X.XX ±0.13 X.X ±0.38
ANGLES ±5°
DIAMETERS TO BE CONCENTRIC WITHIN 0.15 FIM
DRAWING SYMBOLS AND TOLERANCE PER ANSI Y14.5
SURFACE ROUGHNESS PER ANSI B46.1

DRAWN	O.C.	1-22-70
CHECKED	FCS	1-22-70
DESIGNED		
APPROVED	GEC	1-23-70

MATERIAL: 17-4PH CRES (AMS5643)

HEAT TREAT: CONDITION H1025 1100 MPa MIN UTS

FINISH: SOLID FILM LUBRICANT

ROSÁN, INC.
2901 W. COAST HWY., NEWPORT BEACH, CA 92663, USA

SLIMSERT INSERT - METRIC
NO INTERNAL THREAD LOCK
FOR TEMPERATURES UP TO 235°C

SIZE B | FSCM NO. 83324 | DWG NUMBER SRM( )( ) SERIES INSP - INSTL

SCALE: NONE | SHEET 1 OF 2

FORM 80-224

Date Created: Wed Nov 17 07:08:07 2010 Document : SRM( ) SERIES Rev. E 001ds18442_1_0.pdf

NOTICE:
This drawing embodies proprietary data and the design of a product originated by Rosán, Inc. and/or Rosán Engineering Corp. at their own expense and by the use of their own facilities, and all product design, manufacturing, reproduction, use and sale rights regarding same are expressly reserved. It is submitted for a specific purpose, and the recipient agrees by accepting this drawing not to supply or disclose any information regarding it to any unauthorized person, or to incorporate in other projects any special features peculiar to this design. All patent rights hereto are expressly reserved by Rosán, Inc. and/or Rosán Engineering Corp., Newport Beach, California.

DWG NUMBER
SRM( )( )
SERIES
INSP - INSTL

TABLE II

BASIC PART NUMBER [2]	SLIMSERT DIMENSIONS											HOLE PREPARATION DIMENSIONS						TOOLING		
	T1 THD [1] -4H6H/4H5H	T2 THD -4g	A DIA	B DIA MIN	C ±0.20	D	E MIN	L ±0.3 [3] A LENGTH CODE	L ±0.3 [3] B LENGTH CODE	WEIGHT Kg/1000 PCS [5] A LENGTH CODE	WEIGHT Kg/1000 PCS [5] B LENGTH CODE	T3 THD -4H5H	F TAP DRILL DIA	G DIA	H +0.25 -0.00	J MIN FULL THD DEPTH [2] A LENGTH CODE	J MIN FULL THD DEPTH [2] B LENGTH CODE	STEP DRILL NUMBER	DRIVE WRENCH NUMBER	SWAGE TOOL NUMBER
SRM0305( )	MJ3x0.5	M5x0.8	3.17	2.86	2.15	1.6	1.2	—	5.1	—	0.33	M5x0.8	4.14- 4.24	5.00- 5.10	1.70	—	6.1	SRM0305D	SRM0305W2	SRM0305S
SRM0407( )	MJ4x0.7	M6x1	4.21	3.74	2.55	1.9	1.5	—	6.9	—	0.51	M6x1	5.01- 5.11	6.00- 6.10	2.00	—	7.9	SRM0407D	SRM0407W2	SRM0407S
SRM0508( )	MJ5x0.8	M7x1	5.23	4.69	2.95	2.3	1.7	7.6	9.1	0.68	0.83	M7x1	6.03- 6.13	7.00- 7.10	2.40	8.6	10.1	SRM0508D	SRM0508W2	SRM0508S
SRM0610( )	MJ6x1	M8x1	6.28	5.58	3.15	2.4	2.0	8.9	10.7	1.05	1.28	M8x1	7.07- 7.17	8.00- 8.10	2.50	9.9	11.7	SRM0610D	SRM0610W2	SRM0610S
SRM0710( )	MJ7x1	M9x1	7.29	6.58	3.55	2.7	2.4	10.9	13.3	1.51	1.86	M9x1	8.10- 8.20	9.00- 9.10	2.80	11.9	14.3	SRM0710D	SRM0710W2	SRM0710S
SRM0812( )	MJ8x1.25	M10x1	8.32	7.58	3.95	2.9	2.7	12.8	15.7	2.07	2.54	M10x1	9.11- 9.24	10.00-10.13	3.00	13.8	16.7	SRM0812D	SRM0812W2	SRM0812S
SRM0810( )	MJ8x1	M10x1	8.32	7.58	3.95	2.9	2.7	12.8	15.7	2.02	2.47	M10x1	9.11- 9.24	10.00-10.13	3.00	13.8	16.7	SRM0812D	SRM0812W2	SRM0812S
SRM1015( )	MJ10x1.5	M12x1	10.37	9.43	4.65	3.3	3.2	16.2	19.9	3.38	4.28	M12x1	11.16-11.29	12.00-12.13	3.40	17.2	20.9	SRM1015D	SRM1015W2	SRM1015S
SRM1012( )	MJ10x1.25	M12x1	10.37	9.43	4.65	3.3	3.2	16.2	19.9	3.30	4.13	M12x1	11.16-11.29	12.00-12.13	3.40	17.2	20.9	SRM1015D	SRM1015W2	SRM1015S
SRM1215( )	MJ12x1.5	M14x1	12.37	11.43	4.65	3.5	3.2	19.9	24.8	5.20	6.50	M14x1	13.17-13.32	14.00-14.15	3.60	20.9	25.8	SRM1215D	SRM1215W2	SRM1215S
SRM1212( )	MJ12x1.25	M14x1	12.37	11.43	4.65	3.5	3.2	19.9	24.8	5.04	6.25	M14x1	13.17-13.32	14.00-14.15	3.60	20.9	25.8	SRM1215D	SRM1215W2	SRM1215S
SRM1415( )	MJ14x1.5	M16x1	14.37	13.30	4.65	3.6	3.2	23.1	28.8	7.06	8.95	M16x1	15.17-15.32	16.00-16.15	3.70	24.1	29.8	SRM1415D	SRM1415W2	SRM1415S

FOR NOTES REFER TO SHEET 1

LTR	CHANGES	DATE
E	SEE SHEET 1	81-09-08 F.M.

METRIC — THIRD ANGLE PROJECTION
UNLESS OTHERWISE SPECIFIED
ALL DIMENSIONS ARE IN mm
TOLERANCE
DECIMALS X.XX ±0.13 X.X ±0.38 — ANGLES ± —
DIAMETERS TO BE CONCENTRIC WITHIN — FIM
DRAWING SYMBOLS AND TOLERANCE PER ANSI Y14.5
SURFACE ROUGHNESS PER ANSI B46.1

DRAWN	O.C.	1-22-70
CHECKED	FCS	1-22-70
DESIGNED		
APPROVED	GEC	1-23-70
MATERIAL	SEE SHEET 1	
HEAT TREAT	SEE SHEET 1	
FINISH	SEE SHEET 1	

ROSÁN, INC.
2901 W. COAST HWY., NEWPORT BEACH, CA 92663, USA

SLIMSERT INSERT - METRIC
NO INTERNAL THD LOCK
FOR TEMPERATURES UP TO 235°C

SIZE B | FSCM NO. 83324 | DWG NUMBER SRM( )( ) SERIES INSP - INSTL

SCALE: NONE | SHEET 2 OF 2

FORM 80-224

Date Created: Wed Nov 17 07:08:07 2010 Document : SRM( ) SERIES Rev_E 001ds18442_1_0.pdf