001ds22360_1_0.pdf
Date Created: Wednesday, 05 February, 2014 03:10:16 PM Document : SFCH()SU3C() SERIES Rev. A

SFCH( )SU3C( )
SERIES
INSP - INSTL

PART NUMBER CODING:

SFCH 190 SU3C 15

- 15 — NUT END LENGTH CODE OR STUD STAND-OFF "L" IN 1/16" INCREMENTS (15 = .938) SEE TABLE II
- SU3C — MATERIAL CODE
- 190 — THREAD SIZE CODE (190 - .1900 DIA)
- SFCH — ROSAN BASIC PART NUMBER

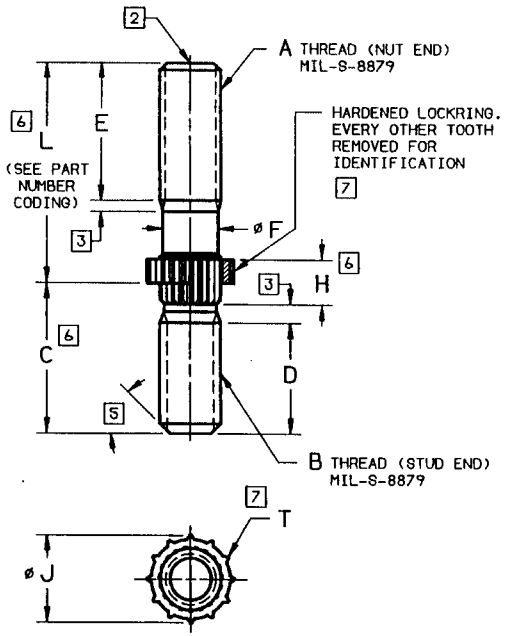

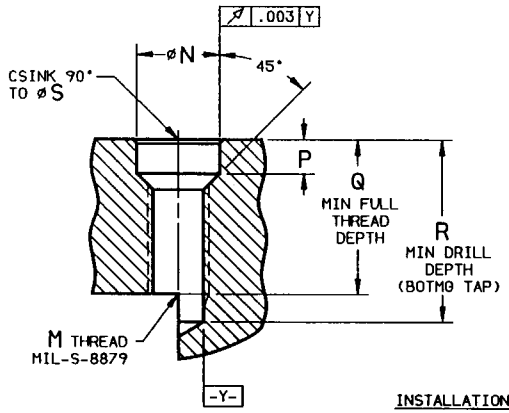

HOLE PREPARATION

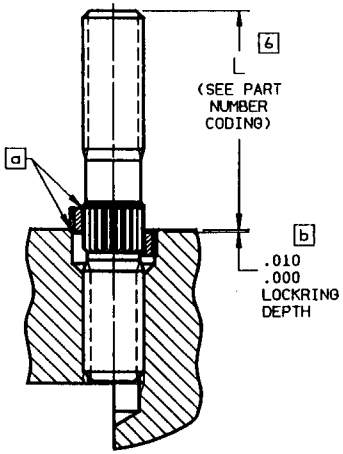

INSTALLATION PROCEDURE:

a THREAD IN STUD UNTIL LOCKRING CONTACTS BOSS SURFACE WITH LOCKRING IN "UP" POSITION.

b USE LOCKRING DRIVE TOOL TO DRIVE LOCKRING TO DEPTH SHOWN.

TABLE I

BASIC PART NUMBER (SEE PART NUMBER CODING)	A THREAD MIL-S-8879 CLASS-3A (NUT END)	B THREAD MIL-S-8879 CLASS-3A (STUD END)	C [6] ±.02	D MIN	E	øF	H MIN	øJ REF	L [6] SEE PART NUMBER CODING	HOLE PREPARATION M THREAD MIL-S-8879 CLASS-3B	øN +.003 -.000	P +.020 -.000	Q MIN	R MIN	øS +.010 -.000	T NUMBER OF TEETH	TOOLING LOCKRING DRIVE TOOL [b]
SFCH164SU3C( )	.1640-36UNJF	.1640-32UNJC	.43	.246	SEE TABLE II	.147	.098	.252	SEE TABLE II	.1640-32UNJC	.228	.087	.444	.52	.265	8	SFC16DH16
SFCH190SU3C( )	.1900-32UNJF	.1900-24UNJC	.47	.285		.170	.130	.274		.1900-24UNJC	.258	.101	.473	.58	.287	10	SFC19DH16
SFCH250SU3C( )	.2500-28UNJF	.2500-20UNJC	.61	.375		.227	.176	.354		.2500-20UNJC	.337	.128	.623	.75	.367	12	SFC25DH16
SFCH312SU3C( )	.3125-24UNJF	.3125-18UNJC	.76	.469		.285	.234	.399		.3125-18UNJC	.381	.169	.747	.89	.412	12	SFC31DH16
SFCH375SU3C( )	.3750-24UNJF	.3750-16UNJC	.90	.562		.348	.280	.468		.3750-16UNJC	.448	.204	.880	1.04	.481	13	SFC38DH16

TABLE II

NUT END LENGTH CODE	L [6] ±.015	E MIN FULL THREAD THREAD SIZE .1640	.1900	.2500	.3125	.3750
5	.312	.185	--	--	--	--
6	.375	.248	.218	--	--	--
7	.438	.310	.281	--	--	--
8	.500	.372	.344	--	--	--
9	.562	.435	.406	.368	--	--
10	.625	.455	.468	.430	--	--
11	.688	.455	.531	.493	.430	--
12	.750	.455	.562	.556	.493	--
13	.812	.455	.562	.618	.555	.519
14	.875	.455	.562	.680	.617	.581
15	.938	.455	.562	.688	.680	.644
16	1.000	.455	.562	.688	.719	.707
17	1.062	.455	.562	.688	.719	.769
18	1.125	.455	.562	.688	.719	.831
19	1.188	.455	.562	.688	.719	.894
20	1.250	.455	.562	.688	.719	.938
21	1.312	.455	.562	.688	.719	.938
22	1.375	.455	.562	.688	.719	.938
23	1.438	.455	.562	.688	.719	.938
24	1.500	.455	.562	.688	.719	.938
25	1.562	.455	.562	.688	.719	.938
26	1.625	.455	.562	.688	.719	.938
27	1.688	.455	.562	.688	.719	.938
28	1.750	.455	.562	.688	.719	.938
29	1.812	.455	.562	.688	.719	.938
30	1.875	.455	.562	.688	.719	.938
31	1.938	.455	.562	.688	.719	.938
32	2.000	.455	.562	.688	.719	.938
33	2.062	--	--	.688	.719	.938
34	2.125	--	--	.688	.719	.938
35	2.188	--	--	.688	.719	.938
36	2.250	--	--	.688	.719	.938
38	2.375	--	--	.688	.719	.938
40	2.500	--	--	.688	.719	.938
42	2.625	--	--	.688	.719	.938
44	2.750	--	--	.688	.719	.938
46	2.875	--	--	--	.719	.938
48	3.000	--	--	--	.719	.938
50	3.125	--	--	--	.719	.938
52	3.250	--	--	--	--	.938
54	3.375	--	--	--	--	.938
56	3.500	--	--	--	--	.938
58	3.625	--	--	--	--	.938
60	3.750	--	--	--	--	.938

NOTES: UNLESS OTHERWISE SPECIFIED

1. MATERIAL AND HEAT TREAT:
STUD: A286 CRES (AMS5731 OR AMS5734), 130 KSI UTS MIN.
LOCKRING: INCONEL 718 (AMS5662), 230 KSI UTS MIN.

2. MANUFACTURERS IDENTIFICATION MARKING.

3. 2 MAX INCOMPLETE THREADS, MAY CONTACT KNURL.

4. SURFACE ROUGHNESS: 125 MICROINCHES Ra, EXCEPT SERRATION 250 MICROINCHES RA.

5. THREAD CHAMFER ANGLES, 2 PLACES: 45° APPROX.

6. NOTED DIMENSIONS APPLY WHEN LOCKRING IS IN "UP" POSITION.

7. THESE LOCKRINGS WILL PENETRATE INTO MOST MATERIALS OF HARDNESS UP TO 40HRC.

PRODUCT DIMENSIONS NOTED ON THIS DRAWING ARE PROVIDED FOR ENVELOPE AND INSPECTION PURPOSES ONLY AND DO NOT INCLUDE DIMENSIONS NECESSARY FOR FABRICATION OF PRODUCT.

LTR	CHANGED	DATE
A	RLSE FOR ENGRG	90-07-20

UNLESS OTHERWISE SPECIFIED ALL DIMENSIONS ARE IN INCHES
TOLERANCE
DECIMALS ±.005 ANGLES ±2°
DIAMETERS TO BE CONCENTRIC WITHIN .006 FIM

DRAWN	T.DO	90-07-20
CHECKED	EP	90-07-23
ENGRG	THD	90-07-24
APPROVED	TAI DO	90-07-25

MATERIAL 1
HEAT TREAT 1
FINISH PASSIVATE PER QQ-P-35

Rosan Products A Unit of Parker Aerospace Fastener Division
P.O. Box 25225 Santa Ana, CA 92799 USA

STUD - RING LOCKED
SIZE-ON-SIZE

SIZE B | CAGE CODE 83324 | SFCH( )SU3C( ) SERIES INSP - INSTL

FORM 0932 | 9007-005 | SCALE NONE | SHEET 1 OF 1