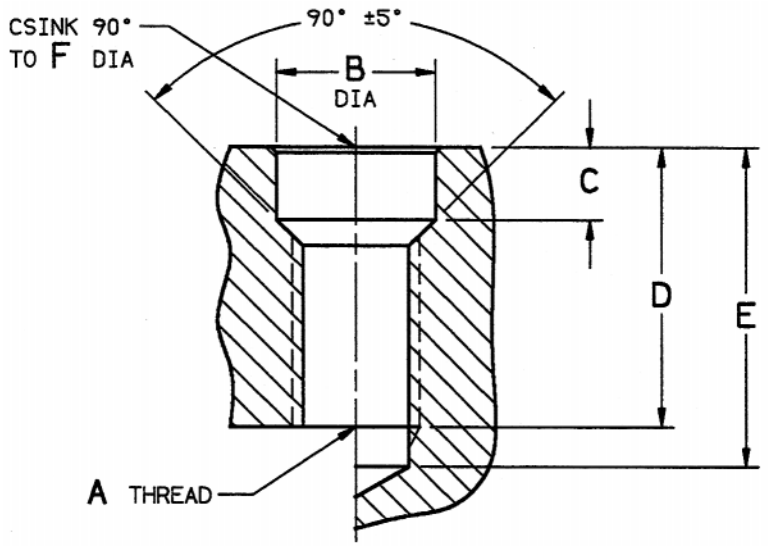


TABLE IV

| STUD PART NUMBER REF | A THREAD CLASS-3B MIL-S-8879 | B DIA [1] +.003 -.000 | C +.030 -.000 | D MIN FULL THREAD DEPTH | E MIN DRILL DEPTH | | F DIA +.010 -.000 |
|---|---|---|---|---|---|---|---|
| | | | | | PLUG TAP | BOTTOM TAP | |
| SFCH164( ) | .1640-32UNJC | .228 | .087 | .450 | .590 | .530 | .265 |
| SFCH190( ) | .1900-24UNJC | .258 | .101 | .490 | .680 | .600 | .287 |
| SFCH250( ) | .2500-20UNJC | .337 | .128 | .630 | .860 | .760 | .367 |
| SFCH312( ) | .3125-18UNJC | .381 | .169 | .780 | 1.030 | .920 | .412 |
| SFCH375( ) | .3750-16UNJC | .448 | .204 | .920 | 1.200 | 1.080 | .481 |

NOTES:

[1] "B" diameter and minor diameter of thread to be concentric within .003 FIM.
2. When parent material surface is not flat or normal to axis of hole, provide a spotface for proper lockring entry.
3. Surface roughness: Machined surfaces to be 125 microinches Ra in accordance with ANSI/ASME B46.1.
4. Remove all burrs and sharp edges.

HOLE PREPARATION,
STUD - RING LOCKED,
SIZE-ON-SIZE,
FOR HARD MATERIAL

SFCH( )
SERIES

© 2020 Howmet Aerospace Inc.