HOWMET AEROSPACE

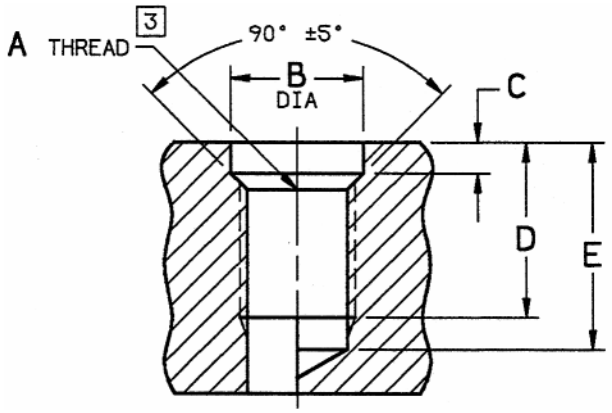

THREAD COMBINATION AND SIZE CODE SFR5902 REF	A THREAD CLASS-3B 3	B DIA +.005 -.000 1	C +.015 -.000	D MIN FULL THREAD DEPTH 6	E MIN DRILL DEPTH	
					PLUG TAP	BOTTOM TAP
502 642 802	.3750-24UNJF	.390	.112	.436 .483 .561	.624 .670 .748	.540 .587 .665
503 643 803	.4375-20UNJF	.453	.151	.536 .608 .723	.761 .833 .948	.661 .733 .848
504 644 804	.5000-20UNJF	.515	.174	.677 .775 .918	.902 1.000 1.143	.802 .900 1.043
505 645 805	.6250-18UNJF	.625	.174	.812 .943 1.126	1.062 1.193 1.376	.951 1.082 1.265
506 646 806	.7500-16UNJF	.750	.178	.858 .998 1.206	1.139 1.279 1.487	1.014 1.154 1.362
507 647 807	.8750-14UNJF	.875	.230	.933 1.088 1.317	1.254 1.409 1.638	1.112 1.267 1.496
508 648 808	1.0000-12UNJF	1.0000	.230	1.203 1.414 1.706	1.578 1.789 2.081	1.411 1.622 1.914

NOTES:

1. "B" diameter and minor diameter of thread to be concentric within .003 FIM.
2. When parent material surface is not flat or normal to axis of hole, provide a spotface for proper lockring entry.
3. Thread as shown per MIL-S-8879 is preferred. Alternate thread per FED-STD-H28/2 class 3B or National class 3 is applicable when specified by design activity.
4. Surface roughness: Machined surfaces to be 125 microinches Ra in accordance with ANSI/ASME B46.1.
5. Remove all burrs and sharp edges.

HOLE PREPARATION,
STUD-RING LOCKED
HIGH STRENGTH, OVERSIZE

SFR5902( )
SERIES

© 2020 Howmet Aerospace Inc.