Arconic Fixations Simmonds SAS

9, rue des Cressonnières
72110 Saint-Cosme-en-Vairais – France - F0224
Tél : 33 (0)2-43-31-41-00
Fax : 33 (0)2-43-33-18-02

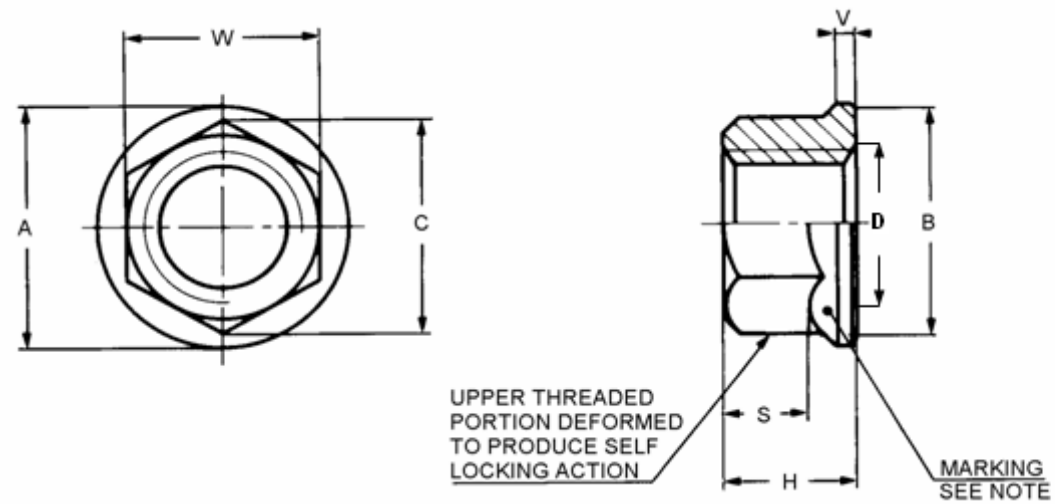

SIMMONDS PART NUMBER	THREAD SIZE	A	B	C	D		H		S	V	W		Z	MINIMUM TENSILE STRENGTH	APPROX WEIGHT
		max.	min.	min.	max.	min.	max.	min.	min.	min.	max.	min.		LBS. min.	LB/100
PLH3502	.0860-56 UNJC-3B	.167	.137	.138	.106	.086	.100	.080	.045	.010	.127	.122	.0025	660	.02
PLH3504	.1120-40 UNJC-3B	.206	.176	.171	.142	.112	.125	.103	.050	.010	.158	.150	.003	1,110	.05
PLH3506	.1380-32 UNJC-3B	.244	.214	.207	.168	.138	.141	.115	.055	.010	.190	.181	.003	1,670	.08
PLH3508	.1640-32 UNJC-3B	.290	.260	.244	.194	.164	.188	.125	.060	.015	.221	.213	.003	2,490	.15
PLH353	.1900-32 UNJF-3B	.330	.290	.277	.220	.190	.188	.154	.065	.015	.252	.243	.003	3,470	.18
PLH354	.2500-28 UNJF-3B	.420	.386	.347	.280	.250	.219	.204	.090	.019	.316	.304	.003	6,200	.35
PLH355	.3125-24 UNJF-3B	.520	.482	.419	.342	.312	.266	.251	.120	.023	.378	.367	.004	9,820	.60
PLH356	.3750-24 UNJF-3B	.620	.575	.491	.405	.375	.282	.267	.125	.030	.440	.430	.004	15,200	.80
PLH357	.4375-20 UNJF-3B	.708	.680	.562	.467	.437	.328	.313	.160	.035	.504	.494	.005	20,600	1.30
PLH358	.5000-20 UNJF-3B	.814	.786	.633	.530	.500	.410	.350	.225	.040	.566	.556	.005	27,500	2.10
PLH359	.5625-18 UNJF-3B	.912	.874	.775	.592	.562	.480	.420	.320	.045	.692	.680	.006	34,800	3.60
PLH3510	.6250-18 UNJF-3B	1.014	.976	.846	.655	.625	.550	.490	.365	.050	.755	.743	.007	43,600	4.50

Contact Arconic for the diameter/type in manufacturing.

■ Dimensions in Inch.

MATERIAL: Alloy steel, heat treated, 49HRC max.

FINISH: PLH354: Cadmium plate, AMS-QQ-P-416, Type II, Class 2.
PLH354M: Cadmium plate plus dry film lubricant in accordance with NASM25027.

THREAD: AS8879 before lubrification.

CLASSIFICATION: 450 °F.

MARKING: "SD" required for size .1640-32 and larger. Optional location.
Sizes .1380-32 and smaller optional. Optional location.

PROCUREMENT SPECIFICATION: NASM25027 except tensile strength.
Code NDT= 100 % Non Destructive Testing.

BEARING SURFACE: Shall be square with pitch diameter within dimension "Z" when measured in accordance with NASM25027.

DESIGNATION: ***PLH 35 10 M-NDT***

- NON-DESTRUCTIVE TESTING
- SURFACE TREATMENT
- DIAMETER CODE
- NUT TYPE
- MATERIAL CODE

NUT – ALLOY STEEL-REDUCED HEX, THIN, LIGHT WEIGHT – 450 °F	PLH35xx-UNJ