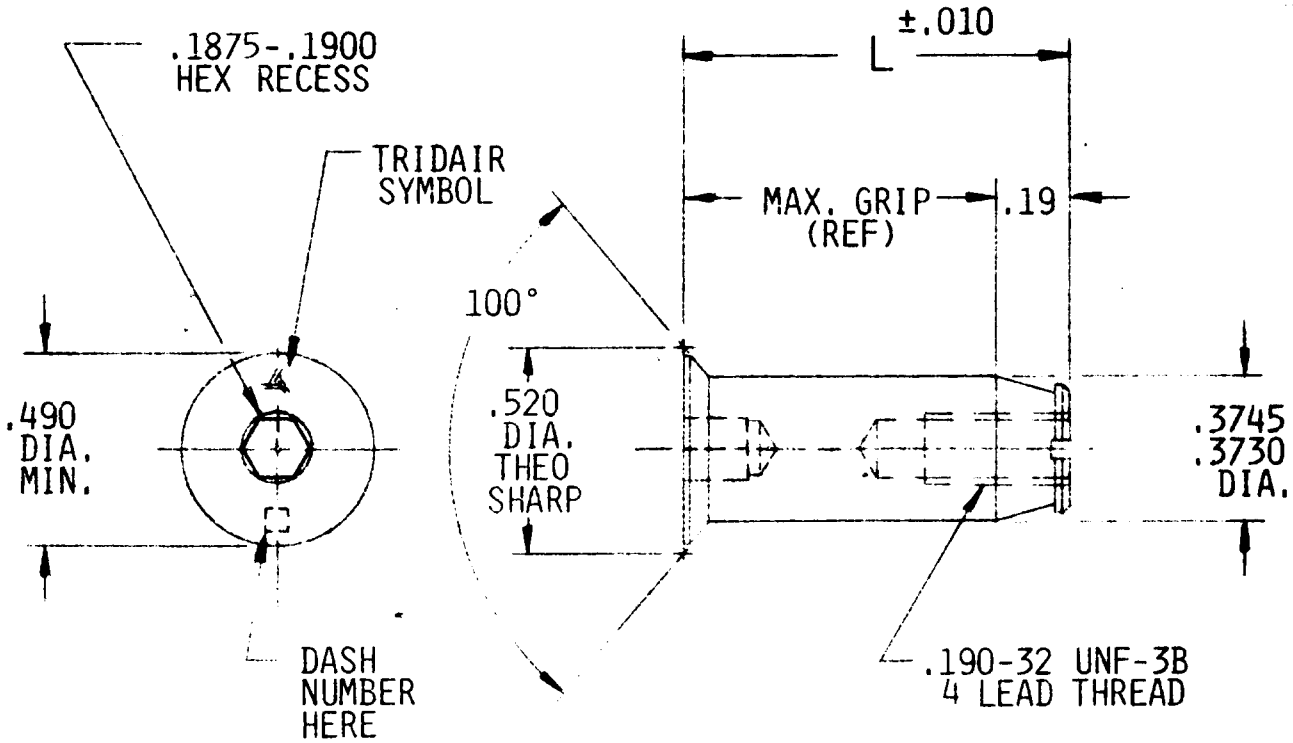


| DASH NUMBER | L | GRIP RANGE MIN. | GRIP RANGE MAX. | WEIGHT LBS/100 |
|---|---|---|---|---|
| -1 | .437 | .180 | .250 | 1.24 |
| -2 | .531 | .251 | .343 | 1.38 |
| -3 | .625 | .344 | .437 | 1.52 |
| -4 | .718 | .438 | .531 | 1.66 |
| -5 | .812 | .532 | .625 | 1.95 |
| -6 | .906 | .626 | .718 | 2.35 |
| -7 | 1.000 | .719 | .812 | 2.75 |
| -8 | 1.093 | .813 | .906 | 3.15 |
| -9 | 1.187 | .907 | 1.000 | 3.55 |
| -10 | 1.281 | 1.001 | 1.090 | 3.95 |
| -11 | 1.375 | 1.091 | 1.187 | 4.35 |
| -12 | 1.468 | 1.188 | 1.281 | 4.75 |
| -13 | 1.562 | 1.282 | 1.375 | 5.15 |

| REVISION | | ECO | DATE | ECO | DATE |
|---|---|---|---|---|---|
| | | D | 10-1-81 | D | 6-20-83 |

DRAWING PROVIDES FORM, FIT AND FUNCTION DATA. DO NOT ATTEMPT TO MANUFACTURE PRODUCT USING THIS DRAWING.

| | | | |
|---|---|---|---|
| DRAWN BY JWH | DATE 10-15-80 | TITLE STUD NUT<br>100° C'SINK, HEX RECESS | Tridair |
| [illegible] | DATE 11-14-80 | | |
| APPROVED BY [illegible] | DATE 11-19-80 | | |
| APPROVED BY | DATE | UNLESS OTHERWISE SPECIFIED: TOLERANCES: DECIMALS .XX ± .02 .XXX ± .010 ANGLES: ± 2° MILLIMETERS ± 0.50 ± 0.25 SURFACE FINISH 125 MICROINCHES | CA172IHS-□ |
| PROJECT NUMBER | | | FSC: 28372 SHEET 1 OF 2 |

FORM 100

NOTES:

1. MATERIAL OPTIONS:

1.1 8740 OR 4140 ALLOY STEEL PER MIL-S-6049 OR MIL-S-5626.

1.2 300 SERIES CRES PER ASTM-A-581, AMS 5640.

2. HEAT TREAT FOR ALLOY STEEL:

2.1 160 K.S.I. MINIMUM ULTIMATE TENSILE STRENGTH PER MIL-H-6875.

3. FINISH OPTIONS AND PART CALLOUT EXAMPLE:

3.1 CA1721HS-2 DENOTES ALLOY STEEL, CADMIUM PLATED PER QQ-P-416, TYPE II, CLASS 2.

3.2 CA1721HS-2B DENOTES CRES, BLACK OXIDED PER MIL-C-13924, CLASS 4.

3.3 CA1721HS-2C DENOTES CRES, CADMIUM PLATED PER QQ-P-416, TYPE II, CLASS 2.

3.4 CA1721HS-2S DENOTES CRES, PASSIVATED PER QQ-P-35.

4. THIS STUD NUT TO BE USED WITH CA1711 RECEPTACLE AND CA1727 OR CA1727-2 RETAINING RING.

DRAWING PROVIDES FORM, FIT AND FUNCTION DATA. DO NOT ATTEMPT TO MANUFACTURE PRODUCT USING THIS DRAWING.

REVISION O P Q

| | | | |
|---|---|---|---|
| DRAWN BY: JWH | DATE 10-16-80 | TITLE: STUD NUT 100° C'SINK, HEX RECESS | Tridair |
| MECHANICAL: [illegible] | DATE 11-11-80 | | |
| APPROVED BY: [illegible] | DATE 11-13-80 | | |
| APPROVED BY: | DATE | UNLESS OTHERWISE SPECIFIED: TOLERANCES: DECIMALS: .XX ± .02 .XXX ± .010 ANGLES ± 2° MILLIMETERS ± 0.50 ± 0.25 SURFACE FINISH 125 MICROINCHES | CA1721HS-B |
| PROJECT NUMBER | | | FSC: 29372 SHEET 2 OF 2 |