MANUFACTURE OF THE PROPRIETARY PARTS SHOWN HERE WITHOUT WRITTEN CONSENT IS ABSOLUTELY PROHIBITED

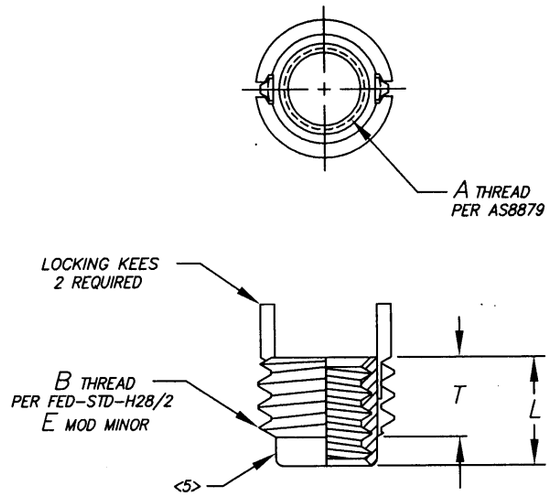

NOTES:

<1> MATERIAL CODES:

1.1 STANDARD MATERIAL IS 303 CRES PER AMS 5640 OR ASTM-A-582, OR 303Se PER AMS 5640, AMS 5738 OR ASTM-A-582.

1.2 OPTIONAL MATERIALS WITH THEIR DESIGNATED FINISH:

F = C1215 CARBON STEEL OR EQUIVALENT. COATED WITH PARKERIZE.

M = CHROME MOLY STEEL, TYPE 4140 PER AMS 6382 OR TYPE 8740 PER AMS 6322. 125 KSI MINIMUM TENSILE STRENGTH. CAD PLATE PER AMS-QQ-P-416, TYPE I, CLASS 3.

MX = CHROME MOLY STEEL, TYPE 4140 PER AMS 6382 OR TYPE 8740 PER AMS 6322. 160 KSI MINIMUM TENSILE STRENGTH.CAD PLATE PER AMS-QQ-P-416,TYPE I, CLASS 3.

NIT = ARMCO, NITRONIC 60 CRES PER ASTM-A-479 OR AMS 5848. PASSIVATE PER AMS 2700.

T = A286 CRES PER AMS 5731, AMS 5732 OR AMS 5737. 140 KSI MINIMUM TENSILE STRENGTH. PASSIVATE PER AMS 2700.

TX = A286 CRES PER AMS 5731. 160 KSI MINIMUM TENSILE STRENGTH. PASSIVATE PER AMS 2700.

1.3 KEE MATERIAL FOR ALL STANDARD AND SPECIAL MATERIAL INSERTS IS 302 CRES PER ASTM-A-580 (CHEMISTRY ONLY) CONTACT ENGINEERING FOR OPTIONAL MATERIALS.

<2> FINISH CODES:

NO CODE= PASSIVATE PER AMS 2700.

SP = SILVER PLATE PER ASTM-B-700, TYPE I, GRADE A, CLASS N

SX = CAD PLATE PER AMS-QQ-P-416, TYPE I, CLASS 3.

SY = CAD PLATE PER AMS-QQ-P-416, TYPE II, CLASS 3.

SZ = CAD PLATE PER AMS-QQ-P-416, TYPE II, CLASS 2.

DRY FILM LUBRICANT ON ALL LOCKING INSERTS UNLESS SPECIFIED BY ADDING "NE" TO FINISH CODE.

3. PART NUMBER EXAMPLE: KNCAL0256JNIT-4SP

KNC A L 02 56 J NIT -4SP

- KNC — BASIC MINIATURE SERIES
- A — "C" OR "A" (SEE TABLE I)
- L — INTERNAL THREAD LOCK (IF REQUIRED)
- 02 — INTERNAL THREAD DIAMETER NUMBERED SCREW SIZE AS FOLLOWS:
  - 10 = #10 SCREW SIZE
  - 08 = #8 SCREW SIZE
  - 06 = #6 SCREW SIZE
  - 04 = #4 SCREW SIZE
  - 02 = #2 SCREW SIZE
  - 008 = #08 SCREW SIZE
- 56 — NO. OF INTERNAL THREADS PER INCH
- J — DESIGNATES AS8879 INTERNAL THREADS
- NIT — MATERIAL CODE <1> (e.g. NITRONIC 60 CRES) (USED ONLY IF MATERIAL REQUIRED IS OTHER THAN STANDARD.)
- -4 — LENGTH IN INCHES (e.g -4 = 4/16 = 1/4 = .2500) (USED ONLY IF LENGTH REQUIRED IS OTHER THAN STANDARD.)
- SP — FINISH/LUBE CODE <2> (e.g. SILVER PLATE PER ASTM-B-700) (USED ONLY IF FINISH REQUIRED IS OTHER THAN STANDARD.)

INTERIM DOCUMENT REVISION		
Rev.	Date	DAF#
J1	10/8/2018	117431

THIS DRAWING EMBODIES A CONFIDENTIAL, PROPRIETARY DESIGN & ALL DESIGN, MANUFACTURING PRODUCTION, USE & SALE RIGHTS REGARDING SAME ARE EXPRESSLY RESERVED.

APPROVED DATE	CURRENT DESIGN ACTIVITY:	TITLE:	CURRENT DESIGN ACTIVITY:
23 FEB 99	ARCONIC Arconic Fastening Systems Tridair Products 3000 W. Lomita Blvd. Torrance, California 90505	-KEENSERT INSERT- MINIATURE INSERTS KNC/KNCC/KNCA SERIES	CAGE CODE: 29372
REV. LETTER AND DATE			SALES DRAWING NO.
~~J 10/30/14C~~ A			KNC( )(L)
DAF NUMBER		UNLESS OTHERWISE SPECIFIED DIMENSIONS ARE IN INCHES & ASME Y14.5M TOLERANCES: ANGLES = ±3° DECIMALS .XX = ±.02 .XXX = ±.010	SHEET 1 OF 3
~~109767~~			

MANUFACTURE OF THE PROPRIETARY PARTS SHOWN HERE WITHOUT WRITTEN CONSENT IS ABSOLUTELY PROHIBITED

TABLE I

PART NUMBER	DIMENSIONS					
	A INTERNAL THREAD CLASS 3B	B EXTERNAL THREAD	E MOD MINOR	MIN. SHEAR ENGAG. AREA in^2	L	T
KNC0080J	.0600-80 UNJF	.1380-40 UNF-3A	N/A	.0132	.100	.085
KNCC0256J	.0860-56 UNJC	.1380-40 UNF-3A	N/A	.0132	.100	.085
KNCCL0256J						
KNCA0256J		.1640-32 UNC-3A	.124-.127	.0157	.120	.088
KNCAL0256J						
KNCA0440J	.1120-40 UNJC	.1900-32 UNF-2A	.150-.153	.0302	.170	.125
KNCAL0440J						
KNC0632J	.1380-32 UNJC	.2160-28 UNF-2A	.171-.174	.0329	.170	.125
KNCL0632J						
KNCA0832J	.1640-32 UNJC	.2500-28 UNF-2A	.212-.215	.0669	.220	.175
KNCAL0832J						

4. REFER TO SPECIFICATION S-70248 FOR ADDITIONAL INFORMATION REGARDING MATERIAL, FINISH, ETC CODES.

<5> INTERNAL THREAD LOCK PERFORMANCE IS PER MIL-I-45914 SPECIFICATION.

6. ALL DIMENSIONS APPLY AFTER PLATING BUT PRIOR TO LUBRICATION.

THIS DRAWING EMBODIES A CONFIDENTIAL, PROPRIETARY DESIGN & ALL DESIGN, MANUFACTURING PRODUCTION, USE & SALE RIGHTS REGARDING SAME ARE EXPRESSLY RESERVED.

INTERIM DOCUMENT REVISION		
Rev.	Date	DAF#
J1	10/8/2018	117431

APPROVED DATE 23 FEB 99	CURRENT DESIGN ACTIVITY: ARCONIC Arconic Fastening Systems **Tridair Products** 3000 W. Lomita Blvd. Torrance, California 90505	TITLE: -KEENSERT INSERT- MINIATURE INSERTS KNC/KNCC/KNCA SERIES	CURRENT DESIGN ACTIVITY: CAGE CODE: 29372
REV. LETTER AND DATE J 10/30/14			SALES DRAWING NO. KNC( )(L)
DAF NUMBER 109767		UNLESS OTHERWISE SPECIFIED DIMENSIONS ARE IN INCHES & ASME Y14.5M TOLERANCES: ANGLES = ±3° DECIMALS .XX = ±.02 .XXX = ±.010	SHEET 2 OF 3

MANUFACTURE OF THE PROPRIETARY PARTS SHOWN HERE WITHOUT WRITTEN CONSENT IS ABSOLUTELY PROHIBITED

THIS DRAWING EMBODIES A CONFIDENTIAL, PROPRIETARY DESIGN & ALL DESIGN, MANUFACTURING PRODUCTION, USE & SALE RIGHTS REGARDING SAME ARE EXPRESSLY RESERVED.

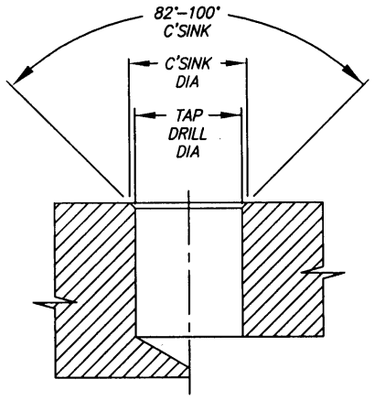

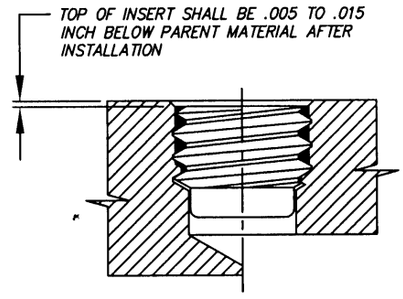

BLIND HOLE INSTALLATION

THRU HOLE INSTALLATION

TABLE II

PART NUMBER	INSTALLATION DATA					REMOVAL DATA	
	TAP DRILL DIA	C'SINK DIA +.010 -.000	THREAD TAP		INSTALLATION TOOL PART NUMBER	DRILL	
			SIZE CLASS 2B	MIN. DEPTH		SIZE	DEPTH
KNC0080J	.122 .119	.140	.1380-40 UNF	.130	TKNC 008	#38 (.101)	1/16
KNCC0256J	.122 .119	.140	.1380-40 UNF	.130	TKNCCL 02	#38 (.101)	
KNCCL0256J							
KNCA0256J	.137 .133	.166	.1640-32 UNC	.140	TKNC 02	#33 (.113)	
KNCAL0256J							
KNCA0440J	.164 .160	.194	.1900-32 UNF	.160	TKNC 04	#29 (.136)	3/32
KNCAL0440J							
KNC0632J	.190 .186	.220	.2160-28 UNF	.160	TKNC 06	#21 (.159)	
KNCL0632J							
KNCA0832J	.231 .227	.255	.2500-28 UNF	.210	TKNC 08	#8 (.199)	1/8
KNCAL0832J							

7. INSTALLATION PROCEDURES:
7.1 PREPARE PANEL IN ACCORDANCE WITH THE DIMENSIONS SHOWN IN TABLE II.
7.2 SCREW IN INSERT WITH FINGERS OR INSTALLATION TOOL. INSERT IS DESIGNED TO STOP AT CORRECT DEPTH.
7.3 DRIVE LOCKING KEES DOWN USING THE INSTALLATION TOOL.

8. REMOVAL PROCEDURES:
8.1 USE THE DRILL SIZES AND DEPTHS SPECIFIED IN TABLE II TO REMOVE MATERIAL BETWEEN THE KEES.
8.2 DEFLECT KEES INWARD AND BREAK OFF.
8.3 REMOVE INSERT WITH AN "EASY OUT" TYPE TOOL.

INTERIM DOCUMENT REVISION		
Rev.	Date	DAF#
J1	10/8/2018	117431

APPROVED DATE 23 FEB 99	CURRENT DESIGN ACTIVITY: ARCONIC Arconic Fastening Systems **Tridair Products** 3000 W. Lomita Blvd. Torrance, California 90505	TITLE: -KEENSERT INSERT- MINIATURE INSERTS KNC/KNCC/KNCA SERIES	CURRENT DESIGN ACTIVITY: CAGE CODE: 29372
REV. LETTER AND DATE J 10/30/14			SALES DRAWING NO.
DAF NUMBER 109767		UNLESS OTHERWISE SPECIFIED DIMENSIONS ARE IN INCHES & ASME Y14.5M TOLERANCES: ANGLES = ±3° DECIMALS .XX = ±.02 .XXX = ±.010	KNC( )(L) SHEET 3 OF 3