HOWMET AEROSPACE

# Frangible Collar Assembly Tools

October 24, 2023

# Tool Selection

## How to Specify Your Tool Selection:

1. Identify the fastener type and diameter by part number.
2. Identify the installed torque range of the fastener.
3. What is the hex size of the collar?  Example: 1/4" = 250
4. Does a pistol grip tool or a straight motor fit the application best?
5. Most tools can be equipped with a 360° index unit that will help with application accessibility.
6. Would the tool fit best with an extended socket or a flush socket?
7. Are the threaded pins interference fit or loose? If they are loose a hex key would be required.
8. Don't see the tool you need? We have 100's of  tool models not listed in this catalog.
9. Need Additional Help? Please call us for assistance, 714-278-8908

### *Example of Complete Tool Model Number:*

**CTL1429 C 343 D 078**

- 078 — Hex Key Size (Table 3) Add "T" for 2-piece (078T)
- D — Extended Socket Length (Table 2)
- 343 — Fastener Hex Size (Table 1)
- C — Ext'd. Drive Shaft and Index Unit (Table 4)
- CTL1429 — Tool Model Number

# New Tool Application Form

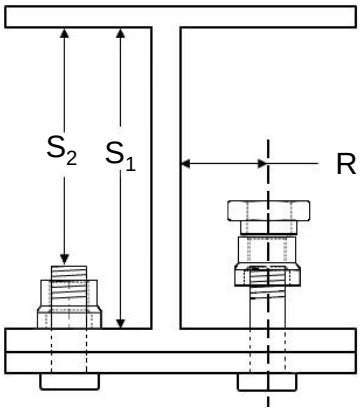


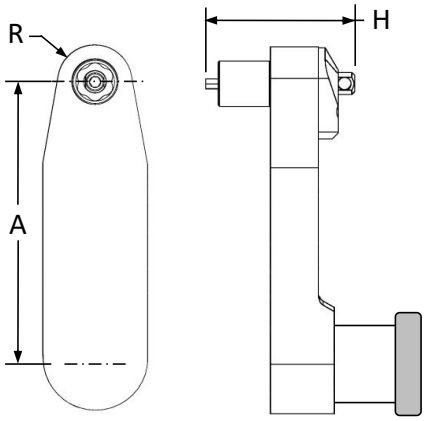


1. Nut or frangible collar part number _____
2. Hex size of the Nut or frangible collar _____ inches _____ mm
3. What is the final torque requirement of the fastener _____ in-lbs., _____ (Nm)
4. "R" Edge distance between centerline of fastener to nearest structure_____ (in) _____(mm)
5. "$S_1$" Total working space _____ (in), _____ (mm)
6. "$S_2$" Minimum clearance over Pin _____ (in) _____ (mm)
7. Will a hex key be required ? YES or NO (circle one), if yes, hex key size _____
8. "A" Offset required, Min _____ Max _____ ( inch or mm )
9. Is an extended socket required? Yes or No, Length of socket __ ( inch or mm )
10. "H" Maximum height of the gear head, Including socket _____ ( inch or mm )

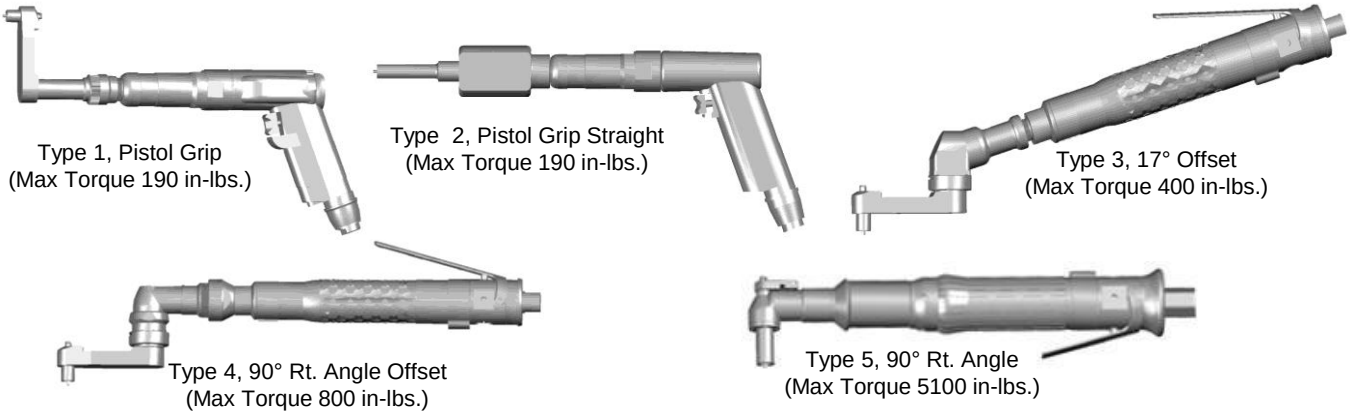


11. Determine type of tool: Type 1 ___, Type 2 ___, Type 3 ___, Type 4 ___, Type 5 ___
12. Make and model number of preferred nutrunner _____

Company Name _____

Contact _____

Phone _____ FAX _____

Return by FAX: (714) 871-4821 or E-mail glenn.anderson@Howmet.com

Form: F-11196 Rev 2

# Standard & Tall Hex Frangible Collars

**Standard "HL" Frangible Collar**

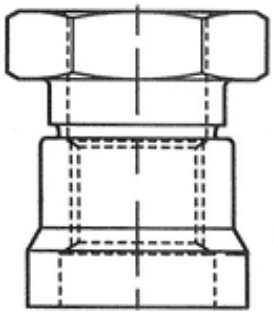

**"HST" (Tall Hex) Frangible Collar**

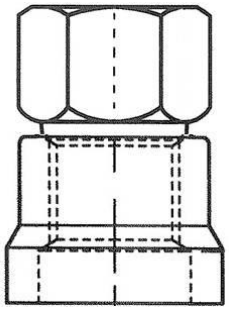

**"Bi-Hex Nut" (Airbus)**

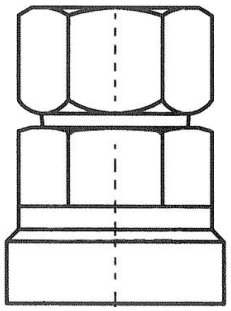

Our socket and hex key systems are designed to install all (3) types of fasteners using the same sockets and hex key systems.

Below is an example of a tool ordering number:

CTL1429C343D078
CTL3429A343D078

# Bi-Hex Nuts

**Example of Fastener Part Numbers:**

ASNA2528-(*)
ASNA2536-(*)
ASNA2537-(*)
ASNA2538-(*)

This fastener can be installed as a "frangible collar" using non-torque controlled tools or as a nut installed with torque controlled tools in a pre-torque or final torque condition.

**"Bi-Hex Nut"**

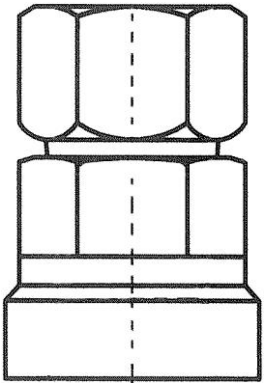

"Bi-Hex" Nuts have (2) wrenchable hex features. The top hex can be used if you are using a non-torque controlled installation tool. The top hex will "break-off" when the proper seating torque has been reached.

If "Pre-Torquing" the nut is important, tightening the nut without breaking the collar, a deep hex recess socket can be used with a *torque controlled tool*. The socket reaches over both hex features and the top hex is not removed. This requires a secondary operation to break off the top hex after a period of time.

**Note: "CTL" Frangible collar tool for final installation**
**"KTLP" indicates a pre-torque tool**

# ERGO KEY™ System for Improved Performance & Safety

This unique hex key design keeps it from turning and twisting the return spring during the fastener installation cycle. It also eliminates torsional friction that can build up during installation cycle improving the spring durability and making it easier to remove the tool and move to the next fastener.

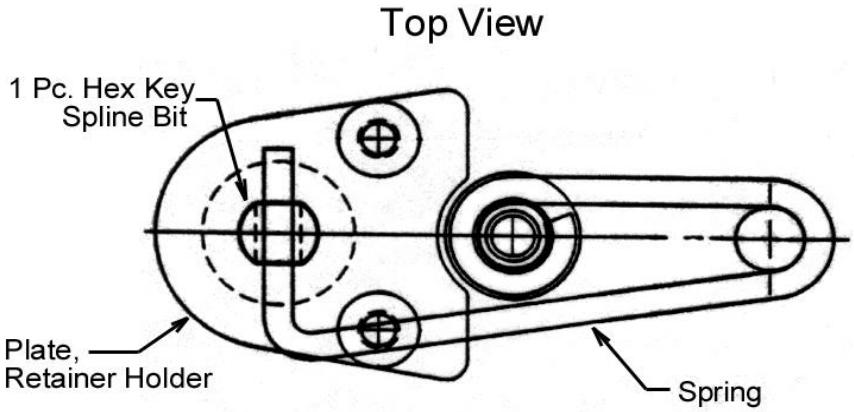


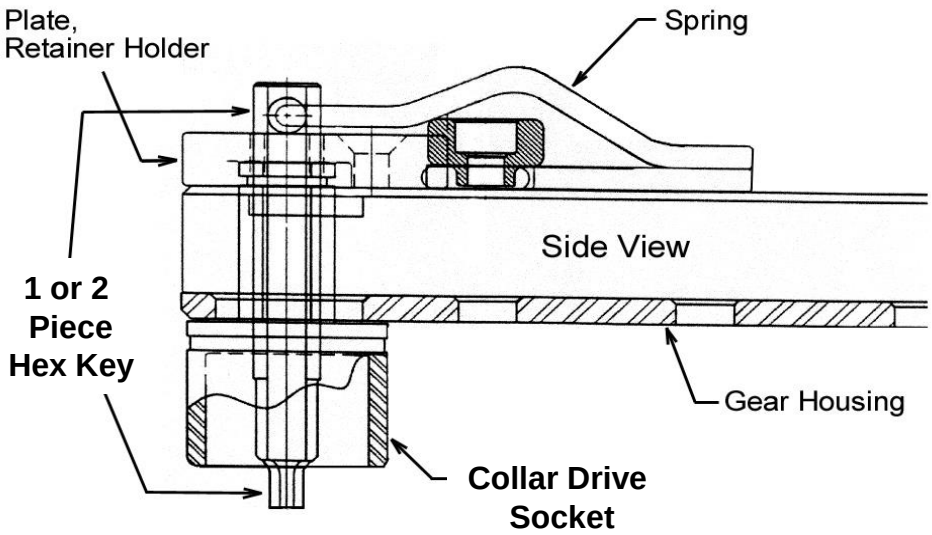

HOWMET AEROSPACE

# High Strength Hex Key System

The purpose of the hex key is to hold the screw or bolt (pin) from turning while the nut is being installed, this is particularly important in non-interference fit holes. It works as a “hold & drive” from the nut side of the application and is affixed to the back of the attached gear housing.

## Improved Strength, Solid 1-Piece Hex Key

***Solid 1-Pc Hex Key*** →

### 1-Piece Hex Key

- Very strong-forged Hex Key
- Available in socket lengths up to 3.0” (76.2mm)
- Hex Keys last longer
- Less downtime
- Improved production
- Easy to change or replace (Does not require tools)
- Lowers fastener install costs
- Available in hex sizes: .062 (1/16”), .078 (5/64), .094 (3/32”)

**1-Piece Hex Key System**

**2-Piece Hex Key System**

**Hex Key**

**Hex Key Holder with Set Screw**

Note: 1-pc and 2-pc hex keys systems are interchangeable

# Optional “Quick Change Socket System”

**The Howmet tool can be equipped with the “Quick Change” socket feature allowing the operator to easily change the socket and hex key size to install a range of fasteners. Usually one tool has the torque capability to install two or more diameters of collars.**

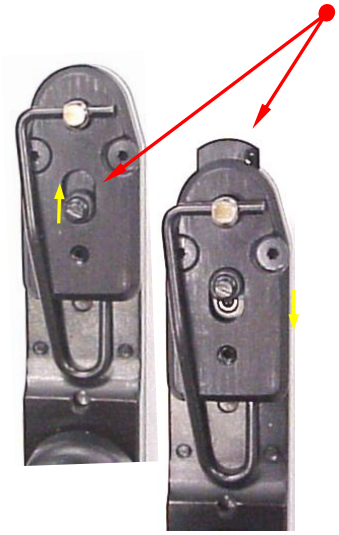

1. Slide the release lever forward, releasing the socket

2. With the release lever forward, a different socket can easily be inserted and is locked in place by pushing the release lever to the locked position.

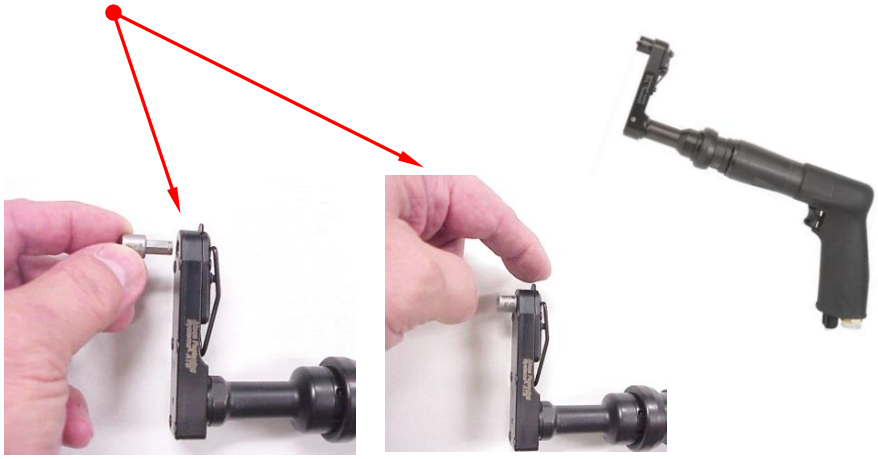

Standard Howmet 1-Piece Hex Keys

(worn or broken keys are easily changed without special tooling)

# Frangible Collar Assembly Tools

## Table of Contents


Pistol Grip Power Tools. . . . . Section 1

17° Offset Power Tools . . . . . Section 2

90° Offset Power Tools . . . . . Section 3

90° Right Angle Tools . . . . . Section 4

Hand Installation Tools &
Hex Key Accessories . . . . . Section 5

Collar Removal Tools . . . . . Section 6



**Sales & Service:**
Howmet Fastening Systems
Assembly Tool Systems Division
801 S. Placentia Avenue
Fullerton, CA 92831 USA

714-278-8908 Customer Service
714-871-4821 FAX

# Frangible Collar Assembly Tools

# Pistol Grip Power Tools

## SECTION 1

Howmet Fastening Systems

HOWMET AEROSPACE

# Frangible Collar Assembly Tools

## Pistol Grip Extended Drive Shaft Options

**Table 4**

Drive Shaft Extended Length

| Code | Extended Shaft Length | Index Unit |
|---|---|---|
| A | - | With |
| B | - | Without |
| C | 2.0" (50.8mm) | With |
| D | 2.0" (50.8mm) | Without |
| G | 6.0" (152.4mm) | With |
| H | 6.0" (152.4mm) | Without |

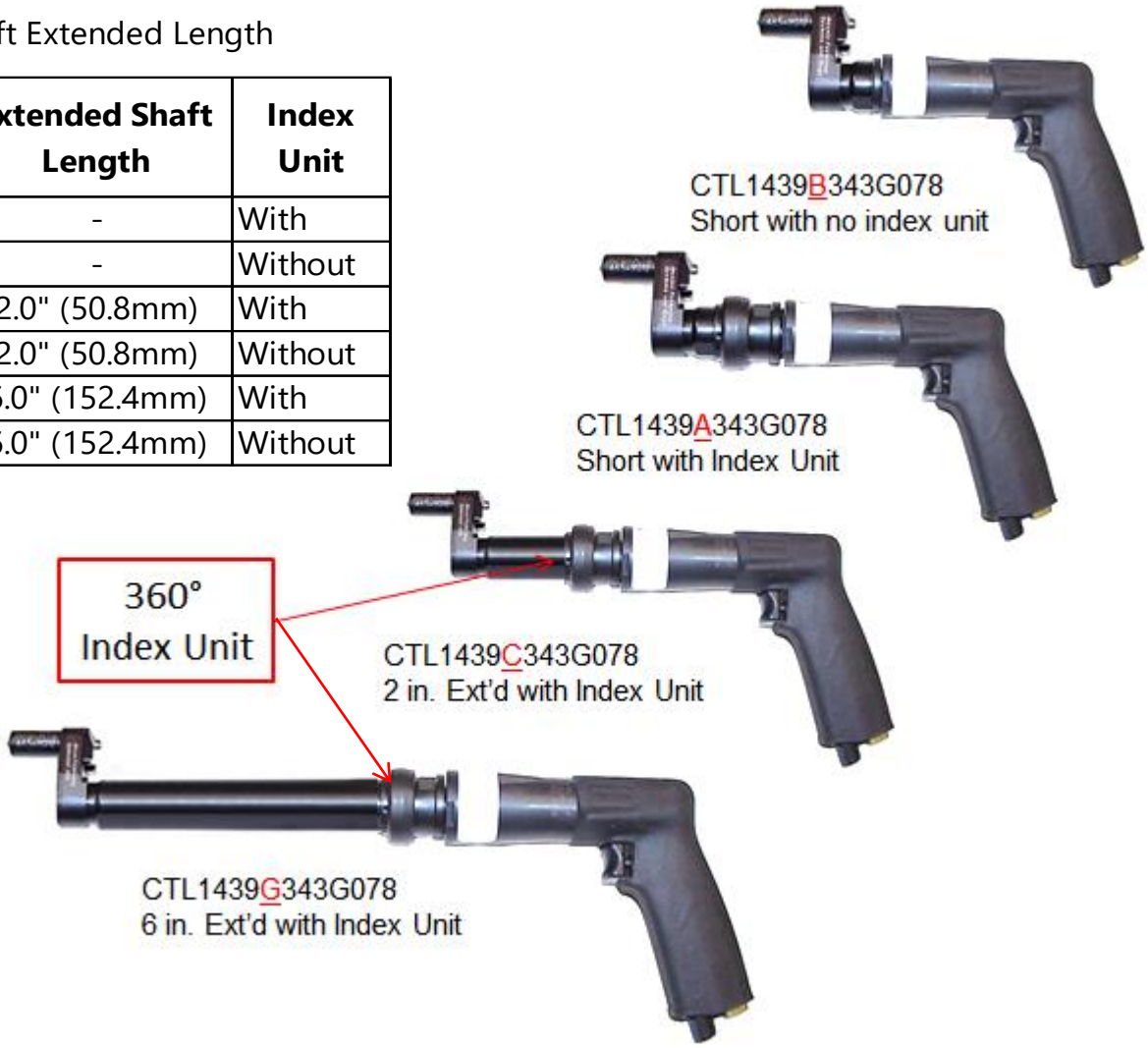


Index units are highly recommended, this feature allows the gear head to rotate and lock into place every 45° increasing the utility in various locations.

# Offset Pistol Grip Tools

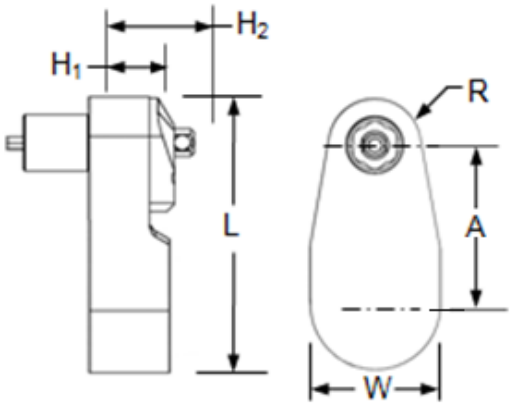

Max Torque 120 In-Lb

Sound level : 78dB(A)

| Model Number | No. of Gears | A | $H_1$ | $H_2$ | L | W | R |
|---|---|---|---|---|---|---|---|
| CTL1428 | 3 | 1.27" [31.8mm] | .47" [11.9mm] | .81" [20.5mm] | 2.11" [53.5mm] | 1.0" [25.4mm] | .35" [8.9mm] |

**Table 1**
Frangible Collar Hex Size (Across Flats)

| Code | Hex Size |
|---|---|
| 219 | 7/32" |
| 250 | 1/4" |
| 312 | 5/16" |
| 343 | 11/32" |
| 437 | 7/16" |

**Table 2**
Extended Socket Length

| Code | Extension |
|---|---|
| A | Flush |
| C | 3/8" |
| D | 1/2" |
| E | 5/8" |
| F | 3/4" |
| G | 1.0" |
| J | 2.0" |

**Table 3a**
Key Hex Size

| Code | Hex Size |
|---|---|
| 062 | 1/16" |
| 078 | 5/64" |
| 094 | 3/32" |
| | |

**Table 3b**
Aster™ Key

| Code | Dia. |
|---|---|
| 000 | No Key |
| AK2 | -2 |
| AK3 | -3 |
| AK3A | -3A |
| AK4 | -4 |

**Table 4**
Drive Shaft Lenth with 360º Index Capability

| Code | Length | Index Unit |
|---|---|---|
| A | - | With |
| C | 2.0" | With |
| G | 6.0" | With |

Largest flush socket size is (.312) 5/16" A/F

## Example of Complete Tool Model Number:

**CTL1428 C 312 E 078**

- 078 — Hex Key Size (Table 3a) or Aster ™ Key Size (Table 3b)
- E — Extended Socket Length (Table 2)
- 312 — Fastener Hex Size (Table 1)
- C — Ext'd. Drive Shaft (Table 4)
- CTL1428 — Tool Model Number



HOWMET AEROSPACE

# Offset Pistol Grip Tools

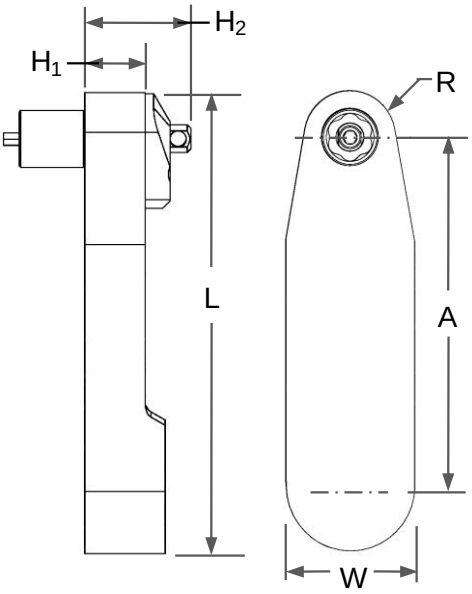


Max Torque 140 In-Lbs

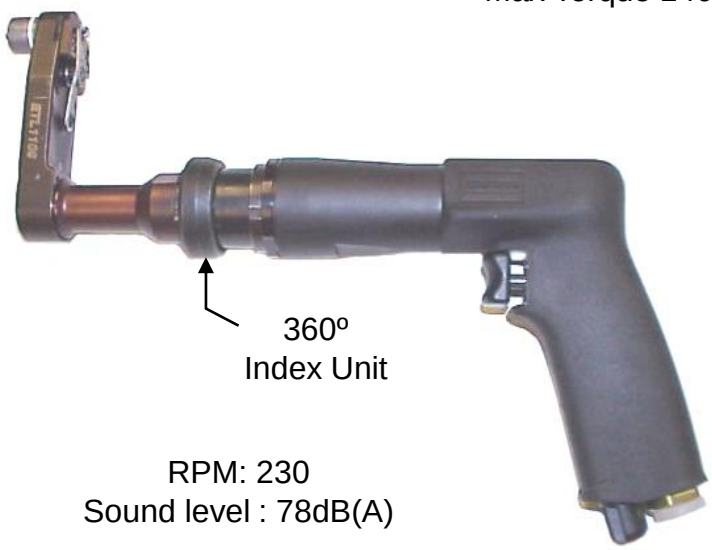


RPM: 230
Sound level : 78dB(A)

| Model Number | No. of Gears | A | $H_1$ | $H_2$ | L | W | R |
|---|---|---|---|---|---|---|---|
| **CTL1439** | 5 | 2.68" [68.1mm] | .38" [9.5mm] | .69" [17.5mm] | 3.53" [89.7mm] | 1.0" [25.4mm] | .35" [8.8mm] |

**Table 1**
Frangible Collar
Hex Size (Across Flats)

| Code | Hex Size |
|---|---|
| 219 | 7/32" |
| 250 | 1/4" |
| 312 | 5/16" |
| 343 | 11/32" |
| 437 | 7/16" |

**Table 2**
Extended Socket Length

| Code | Extension |
|---|---|
| A | Flush |
| C | 3/8" |
| D | 1/2" |
| E | 5/8" |
| F | 3/4" |
| G | 1.0" |
| J | 2.0" |

**Table 3a**
Key Hex Size

| Code | Hex Size |
|---|---|
| 062 | 1/16" |
| 078 | 5/64" |
| 094 | 3/32" |
| | |

**Table 3b**
Aster™ Key

| Code | Dia. |
|---|---|
| 000 | No Key |
| AK2 | -2 |
| AK3 | -3 |
| AK3A | -3A |
| AK4 | -4 |

**Table 4**
Drive Shaft Lenth with 360º Index Capability

| Code | Length | Index Unit |
|---|---|---|
| A | - | With |
| C | 2.0" | With |
| G | 6.0" | With |

Maximum Flush Socket is 5/16” (.312) Hex

Example of Complete Tool Model Number:

**CTL1439 C 312 E 078**

- 078 — Hex Key Size (Table 3a) or Aster ™ Key Size (Table 3b)
- E — Extended Socket Length (Table 2)
- 312 — Fastener Hex Size (Table 1)
- C — Ext’d. Drive Shaft (Table 4)
- CTL1439 — Tool Model Number

# Offset Pistol Grip Tools

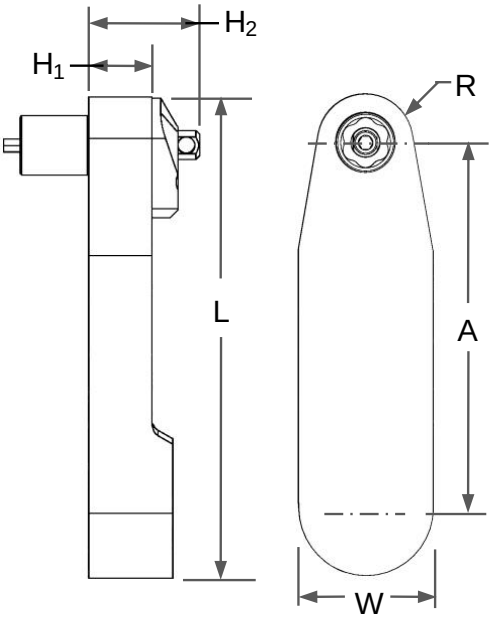


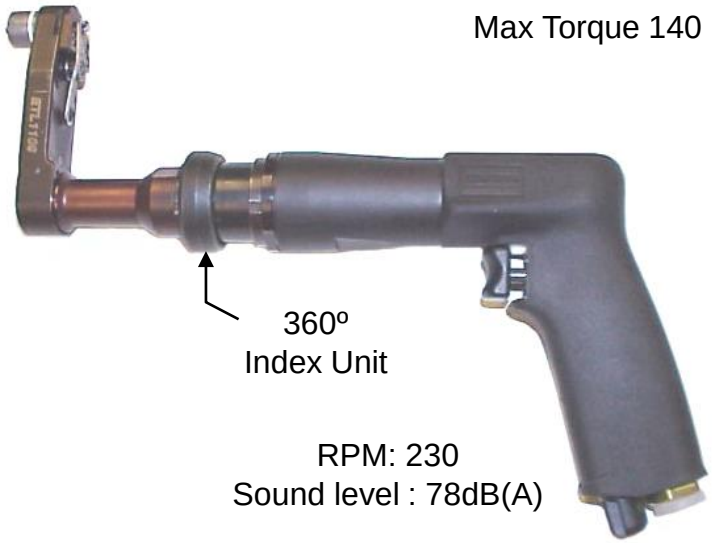


Max Torque 140 In-Lb.

RPM: 230
Sound level : 78dB(A)

| Model Number | No. of Gears | A | $H_1$ | $H_2$ | L | W | R |
|---|---|---|---|---|---|---|---|
| **CTL1429** | 5 | 2.68 [68.1mm] | .47 [11.9mm] | .81 [20.5mm] | 3.53 [89.7mm] | 1.0 [25.4mm] | .35 [8.8mm] |

**Table 1**
Frangible Collar Hex Size (Across Flats)

| Code | Hex Size |
|---|---|
| 219 | 7/32" |
| 250 | 1/4" |
| 312 | 5/16" |
| 343 | 11/32" |
| 437 | 7/16" |

**Table 2**
Extended Socket Length

| Code | Extension |
|---|---|
| A | Flush |
| C | 3/8" |
| D | 1/2" |
| E | 5/8" |
| F | 3/4" |
| G | 1.0" |
| J | 2.0" |

**Table 3a**
Key Hex Size

| Code | Hex Size |
|---|---|
| 062 | 1/16" |
| 078 | 5/64" |
| 094 | 3/32" |
| | |

**Table 3b**
Aster™ Key

| Code | Dia. |
|---|---|
| 000 | No Key |
| AK2 | -2 |
| AK3 | -3 |
| AK3A | -3A |
| AK4 | -4 |

**Table 4**
Drive Shaft Lenth with 360º Index Capability

| Code | Length | Index Unit |
|---|---|---|
| A | - | With |
| C | 2.0" | With |
| G | 6.0" | With |

Maximum Flush Socket is 5/16" (.312) Hex

Example of Complete Tool Model Number:

**CTL1429 C 312 E 078**

- 078 — Hex Key Size (Table 3a) or Aster™ Key Size (Table 3b)
- E — Extended Socket Length (Table 2)
- 312 — Fastener Hex Size (Table 1)
- C — Ext'd. Drive Shaft (Table 4)
- CTL1429 — Tool Model Number



HOWMET AEROSPACE

# Offset Pistol Grip Tools

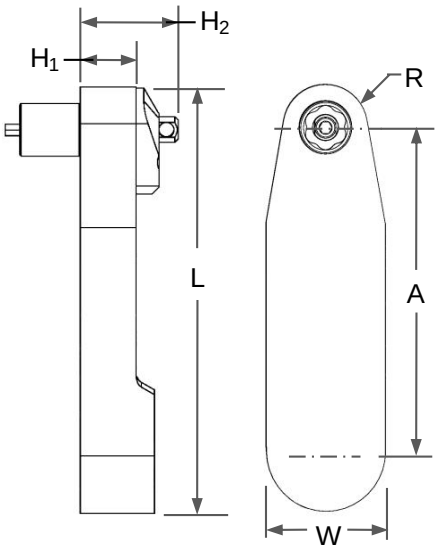


Max Torque 160 in-lbs.

| Model Number | No. of Gears | A | $H_1$ | $H_2$ Ref. | L | W | R |
|---|---|---|---|---|---|---|---|
| **CTL1452A** | 5 | 2.72" [69.0mm] | .47" [11.9mm] | .72" [18.5mm] | 3.7" [94.7mm] | 1.0" [25.4mm] | .39" [10.0mm] |

**Table 1**
Frangible Collar Hex Size (Across Flats)

| Code | Hex Size |
|---|---|
| 219 | 7/32" |
| 250 | 1/4" |
| 312 | 5/16" |
| 343 | 11/32" |
| 375 | 3/8" |
| 437 | 7/16" |

**Table 2**
Ext'd.Socket Length

| Code | Extension |
|---|---|
| A | Flush |
| C | 3/8" |
| D | 1/2" |
| E | 5/8" |
| G | 1.0" |
| J | 2.0" |

**Table 3**
Key Hex Size

| Code | Hex Size |
|---|---|
| 000 | No Key |
| 078 | 5/64" |
| 094 | 3/32" |
| 125T | 1/8" |

**Table 4**
Drive Shaft Length with 360º Index Unit

| Code | Length |
|---|---|
| A | - |
| C | 2.0" |
| G | 6.0" |

Max flush socket size is .343 (11/32")

Example of Complete Tool Model Number:

**CTL1452 C 343 A 078**

- 078 — Hex Key Size (Table 3)
- A — Extended Socket Length (Table 2)
- 343 — Fastener Hex Size (Table 1)
- C — Drive Shaft Length (Table 4)
- CTL1452 — Tool Model Number



HOWMET AEROSPACE

# Offset Pistol Grip Tools

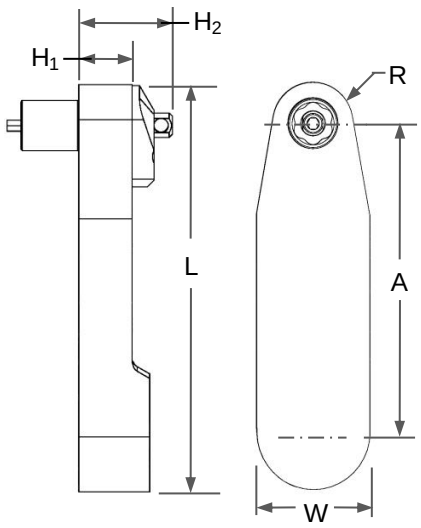

| Model Number | No. of Gears | A | $H_1$ | $H_2$ | L | W | R |
|---|---|---|---|---|---|---|---|
| **CTL1106** | 7 | 4.08" [103.6mm] | .47" [11.9mm] | .78" [19.8mm] | 4.9" [124.5mm] | 1.0" [25.4mm] | .32" [8.2mm] |

**Table 1**
Frangible Collar Hex Size (Across Flats)

| Code | Hex Size |
|---|---|
| 219 | 7/32" |
| 250 | 1/4" |
| 312 | 5/16" |
| 343 | 11/32" |
| 437 | 7/16" |

**Table 2**
Extended Socket Length

| Code | Extension |
|---|---|
| A | Flush |
| C | 3/8" |
| D | 1/2" |
| E | 5/8" |
| F | 3/4" |
| G | 1.0" |
| J | 2.0" |

**Table 3a**
Key Hex Size

| Code | Hex Size |
|---|---|
| 062 | 1/16" |
| 078 | 5/64" |
| 094 | 3/32" |
| | |

**Table 3b**
Aster™ Key

| Code | Dia. |
|---|---|
| 000 | No Key |
| AK2 | -2 |
| AK3 | -3 |
| AK3A | -3A |
| AK4 | -4 |

**Table 4**
Drive Shaft Lenth with 360° Index Capability

| Code | Length | Index Unit |
|---|---|---|
| A | - | With |
| C | 2.0" | With |
| G | 6.0" | With |

Largest flush socket size is (.312) 5/16" A/F

Example of Complete Tool Model Number:

**CTL1106 C 343 D 078**

- 078 — Hex Key Size (Table 3)
- D — Extended Socket Length (Table 2)
- 343 — Fastener Hex Size (Table 1)
- C — Ext'd. Drive Shaft (Table 4)
- CTL1106 — Tool Model Number



HOWMET AEROSPACE

# Offset Pistol Grip Tools

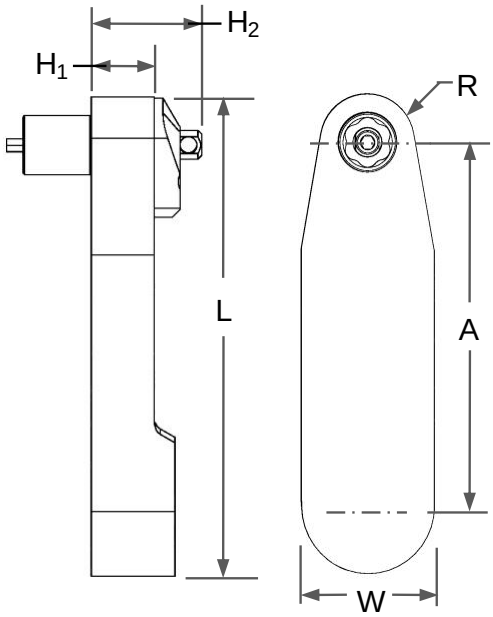


Max Torque 140 in-lbs.

| Model Number | No. of Gears | A | $H_1$ | $H_2$ | L | W | R |
|---|---|---|---|---|---|---|---|
| **CTL1438** | 7 | 4.13" [104.9mm] | .47" [11.9mm] | .81" [20.5mm] | 4.98" [126.5mm] | 1.0" [25.4mm] | .35" [8.8mm] |

**Table 1**
Frangible Collar
Hex Size (Across Flats)

| Code | Hex Size |
|---|---|
| 219 | 7/32" |
| 250 | 1/4" |
| 312 | 5/16" |
| 343 | 11/32" |
| 375 | 3/8" |
| 437 | 7/16" |

**Table 2**
Ext'd.Socket Length

| Code | Extension |
|---|---|
| C | 0.375" |
| D | 0.500" |
| E | 0.625" |
| G | 1.0" |
| J | 2.0" |

**Table 3**
Key Hex Size

| Code | Size |
|---|---|
| 062 | 1/16" Hex Key |
| 078 | 5/64" Hex Key |
| 094 | 3/32" Hex Key |
| | |

**Table 4**
Drive Shaft Length
with 360° Index Unit

| Code | Length |
|---|---|
| A | - |
| C | 2.0" |
| G | 6.0" |

Largest flush socket size is 5/16" A/F

Example of Complete Tool Model Number:

**CTL1438 C 343 D 078**

- 078 — Hex Key Size (Table 3)
- D — Extended Socket Length (Table 2)
- 343 — Fastener Hex Size (Table 1)
- C — Ext'd. Drive Shaft (Table 4)
- CTL1438 — Tool Model Number

# Offset Pistol Grip Tools

Max Torque 80 in_lbs

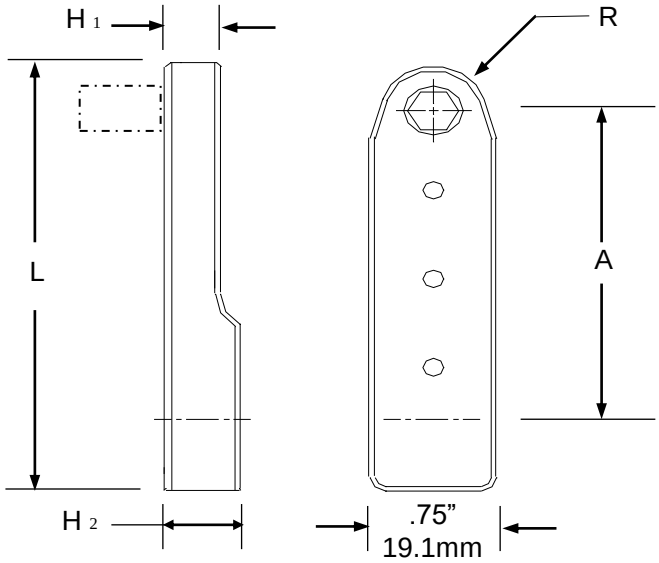

| Model Number | No. of Gears | A | H1 | H2 | L | R |
|---|---|---|---|---|---|---|
| CTL1408 | 5 | 2.38 | .34 [8.6mm] | .46 | 4.18 [106.1mm] | .31 [7.9mm] |

**Table 1**
Hex Size (Across Flats)

| Code | Hex Size |
|---|---|
| 219 | 7/32" |
| 250 | 1/4" |

**Table 2**
Ext'd.Socket Length

| Code | Extension |
|---|---|
| A | Flush |
| B | 1/4" |
| C | 3/8" |
| D | 1/2" |

**Table 3a**
Key Hex Size

| Code | Size |
|---|---|
| 000 | No Key |
| 062 | 1/16" |
| 078 | 5/64" |

**Table 3b**
Aster™ Key

| Code | Dia. |
|---|---|
| 000 | No Key |
| AK2 | -2 |
| AK3 | -3 |
| AK3A | -3A |

Example of Complete Tool Model Number:

**CTL1408A 312 D 000**

- 000 — Hex Key Size (Table 3a or 3b)
- D — Extended Socket Length (Table 2)
- 312 — Fastener Hex Size (Table 1)
- CTL1408A — Tool Model Number



HOWMET AEROSPACE

# Offset Pistol Grip Tools

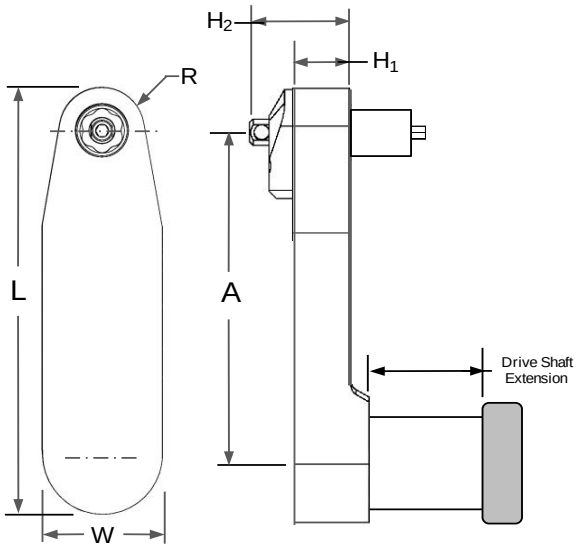


Max Torque 130 in-lbs.

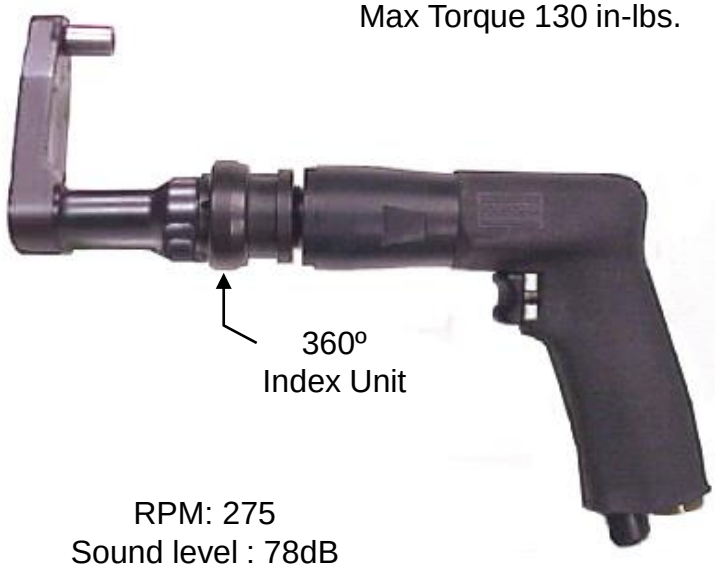


RPM: 275
Sound level : 78dB

## Back Drive Socket Position

| Model Number | No. of Gears | A | $H_1$ | $H_2$ | L | R |
|---|---|---|---|---|---|---|
| **CTL1449** | 4 | 1.96 [49.8mm] | .47 [11.8mm] | .81 [20.5mm] | 2.81 [71.4mm] | .35 [8.8mm] |

**Table 1**
Frangible Collar
Hex Size (Across Flats)

| Code | Hex Size |
|---|---|
| 219 | 7/32" |
| 250 | 1/4" |
| 312 | 5/16" |
| 343 | 11/32" |
| 375 | 3/8" |
| 437 | 7/16" |

**Table 2**
Ext'd.Socket Length

| Code | Extension |
|---|---|
| C | 0.375" |
| D | 0.500" |
| E | 0.625" |
| G | 1.0" |
| J | 2.0" |

**Table 3**
Key Hex Size

| Code | Size |
|---|---|
| 062 | 1/16" Hex Key |
| 078 | 5/64" Hex Key |
| 094 | 3/32" Hex Key |
| | |

**Table 4**
Drive Shaft Length
with 360º Index Unit

| Code | Length |
|---|---|
| A | - |
| C | 2.0" |
| G | 6.0" |

Largest flush socket gear size is 5/16” A/F

Example of Complete Tool Model Number:

**CTL1449 C 343 D 078**

- 078 — Hex Key Size (Table 3)
- D — Extended Socket Length (Table 2)
- 343 — Fastener Hex Size (Table 1)
- C — Ext’d. Drive Shaft (Table 4)
- CTL1449 — Tool Model Number



HOWMET AEROSPACE

# Offset Pistol Grip Tools

Max Torque 140 in-lbs.

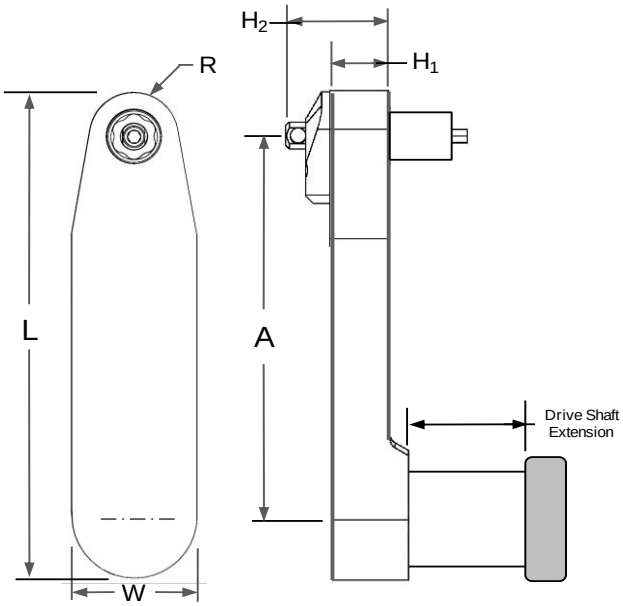


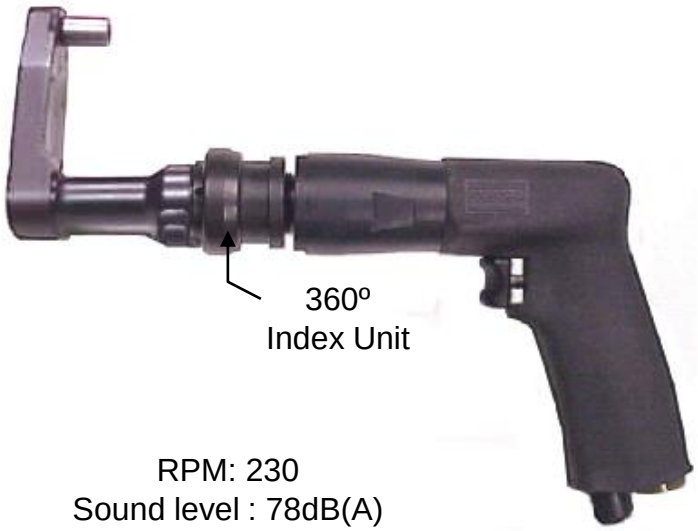


RPM: 230
Sound level : 78dB(A)

## Back Drive Socket Position

| Model Number | No. of Gears | A | $H_1$ | $H_2$ | L | R |
|---|---|---|---|---|---|---|
| **CTL1434** | 6 | 3.47 [88.1mm] | .47 [11.9mm] | .81 [20.5mm] | 4.39 [111.7mm] | .43 [10.8mm] |

**Table 1**
Frangible Collar
Hex Size (Across Flats)

| Code | Hex Size |
|---|---|
| 219 | 7/32" |
| 250 | 1/4" |
| 312 | 5/16" |
| 343 | 11/32" |
| 375 | 3/8" |
| | |

**Table 2**
Ext'd.Socket Length

| Code | Extension |
|---|---|
| C | 0.375" |
| D | 0.500" |
| E | 0.625" |
| G | 1.0" |
| J | 2.0" |

**Table 3**
Key Hex Size

| Code | Size |
|---|---|
| 062 | 1/16" Hex Key |
| 078 | 5/64" Hex Key |
| 094 | 3/32" Hex Key |
| | |

**Table 4**
Drive Shaft Length
with 360º Index Unit

| Code | Length |
|---|---|
| A | - |
| C | 2.0" |
| G | 6.0" |

Largest flush socket gear size is 5/16" A/F

Example of Complete Tool Model Number:

**CTL1434 C 343 D 078**

- 078 — Hex Key Size (Table 3)
- D — Extended Socket Length (Table 2)
- 343 — Fastener Hex Size (Table 1)
- C — Ext'd. Drive Shaft (Table 4)
- CTL1434 — Tool Model Number



HOWMET AEROSPACE

# Offset Pistol Grip Tools

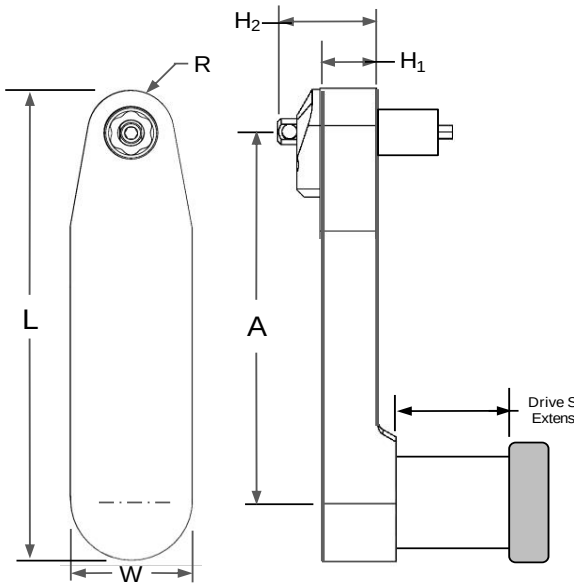


Max Torque 140 in-lbs.

RPM: 230
Sound level : 78dB(A)

## Back Drive Socket Position

| Model Number | No. of Gears | A | $H_1$ | $H_2$ | L | R |
|---|---|---|---|---|---|---|
| **CTL1715** | 6 | 3.38 [85.9mm] | .47 [11.9mm] | .66 [16.7mm] | 4.20 [106.7mm] | .33 [8.3mm] |

**Table 1**
Frangible Collar
Hex Size (Across Flats)

| Code | Hex Size |
|---|---|
| 219 | 7/32" |
| 250 | 1/4" |
| 312 | 5/16" |

**Table 2**
Ext'd.Socket Length

| Code | Extension |
|---|---|
| C | 0.375" |
| D | 0.500" |
| E | 0.625" |
| G | 1.0" |
| J | 2.0" |

**Table 3**
Key Hex Size

| Code | Size |
|---|---|
| 062 | 1/16" Hex Key |
| 078 | 5/64" Hex Key |
| 094 | 3/32" Hex Key |
| | |

**Table 4**
Drive Shaft Length
with 360° Index Unit

| Code | Length |
|---|---|
| A | - |
| C | 2.0" |
| G | 6.0" |

Largest flush socket gear size is 5/16" A/F

Example of Complete Tool Model Number:

**CTL1715 C 312 D 078**

- 078 — Hex Key Size (Table 3)
- D — Extended Socket Length (Table 2)
- 312 — Fastener Hex Size (Table 1)
- C — Ext'd. Drive Shaft (Table 4)
- CTL1715 — Tool Model Number



HOWMET AEROSPACE

# Offset Pistol Grip Tools

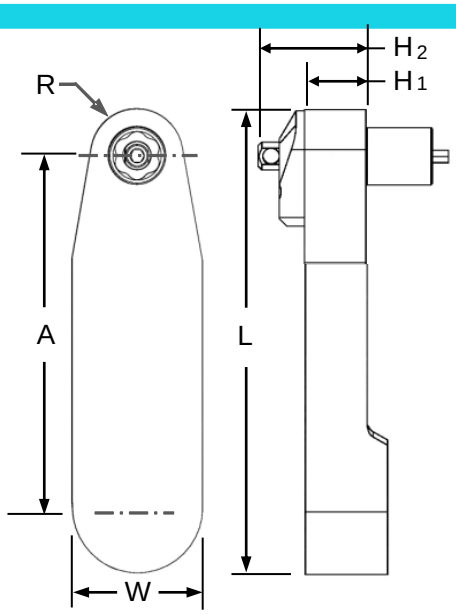


Back Drive Socket Position

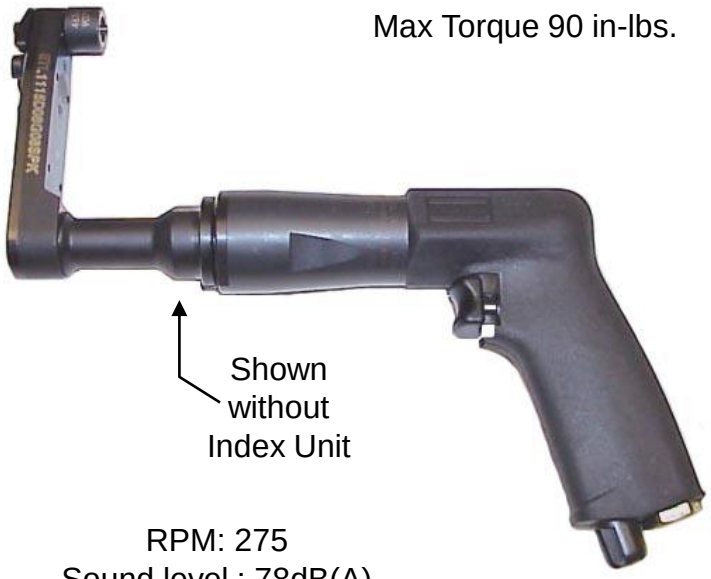


Max Torque 90 in-lbs.

RPM: 275
Sound level : 78dB(A)

| Model Number | No. of Gears | A | $H_1$ | $H_2$ | L | W | R |
|---|---|---|---|---|---|---|---|
| **CTL1424** | 6 | 3.38" [85.8mm] | .47" [11.9mm] | .81" [20.5mm] | 4.05" [102.9mm] | 1.0" [25.4mm] | .35" [8.8mm] |

**Table 1**
Frangible Collar
Hex Size (Across Flats)

| Code | Hex Size |
|---|---|
| 219 | 7/32" |
| 250 | 1/4" |
| 312 | 5/16" |
| 343 | 11/32" |
| 375 | 3/8" |
| 437 | 7/16" |

**Table 2**
Ext'd.Socket Length

| Code | Extension |
|---|---|
| A | Flush |
| C | 0.375" |
| D | 0.500" |
| E | 0.625" |
| G | 1.0" |
| J | 2.0" |

**Table 3**
Key Hex Size

| Code | Hex Size |
|---|---|
| 062 | 1/16" |
| 078 | 5/64" |
| 094 | 3/32" |
| | |

**Table 4**
Drive Shaft Length
with 360º Index Unit

| Code | Length |
|---|---|
| A | - |
| C | 2.0" |
| G | 6.0" |

Largest flush socket gear size is 5/16" A/F

Example of Complete Tool Model Number:

**CTL1424 C 312 D 094**

- 094 — Hex Key Size (Table 3)
- D — Extended Socket Length (Table 2)
- 312 — Fastener Hex Size (Table 1)
- C — Ext'd. Drive Shaft (Table 4)
- CTL1424 — Tool Model Number



HOWMET AEROSPACE

# Offset Pistol Grip Tools

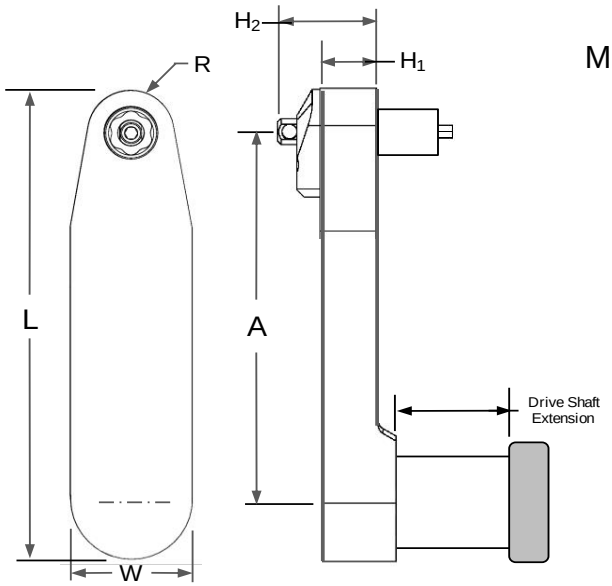


Max Torque 100 in-lbs.

RPM: 230
Sound level : 78dB(A)

## Back Drive Socket Position

| Model Number | No. of Gears | A | $H_1$ | $H_2$ | L | R |
|---|---|---|---|---|---|---|
| **CTL1416** | 8 | 4.88 [1224mm] | .47 [11.9mm] | .78 [19.8mm] | 5.80 [147.3mm] | .43 [10.9mm] |

**Table 1**
Frangible Collar
Hex Size (Across Flats)

| Code | Hex Size |
|---|---|
| 219 | 7/32" |
| 250 | 1/4" |
| 312 | 5/16" |

**Table 2**
Ext'd.Socket Length

| Code | Extension |
|---|---|
| C | 0.375" |
| D | 0.500" |
| E | 0.625" |
| G | 1.0" |
| J | 2.0" |

**Table 3**
Key Hex Size

| Code | Size |
|---|---|
| 062 | 1/16" Hex Key |
| 078 | 5/64" Hex Key |
| 094 | 3/32" Hex Key |
| | |

**Table 4**
Drive Shaft Length
with 360º Index Unit

| Code | Length |
|---|---|
| A | - |
| C | 2.0" |
| G | 6.0" |

Largest flush socket gear size is 5/16" A/F

Example of Complete Tool Model Number:

**CTL1416 C 312 D 078**

- 078 — Hex Key Size (Table 3)
- D — Extended Socket Length (Table 2)
- 312 — Fastener Hex Size (Table 1)
- C — Ext'd. Drive Shaft (Table 4)
- CTL1416 — Tool Model Number



HOWMET AEROSPACE

# Offset Pistol Grip Tools

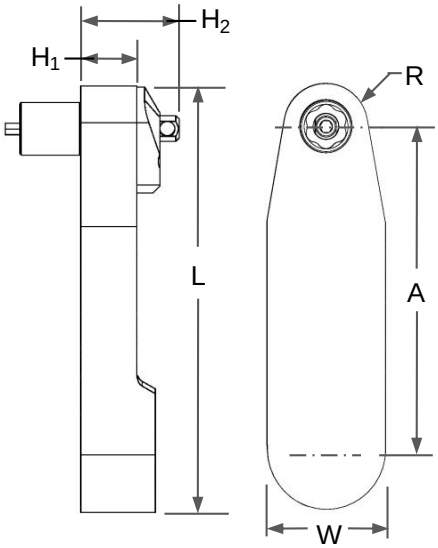


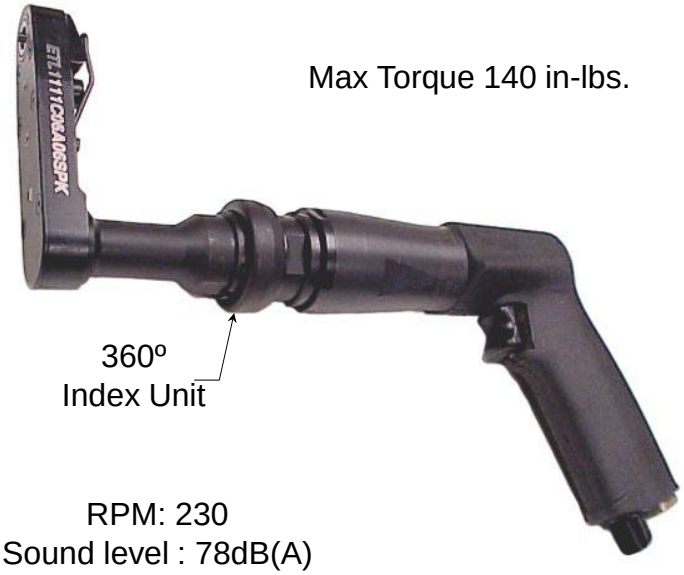


Max Torque 140 in-lbs.

RPM: 230
Sound level : 78dB(A)

| Model Number | No. of Gears | A | $H_1$ | $H_2$ Ref. | L | W | R |
|---|---|---|---|---|---|---|---|
| **CTL1461** | 5 | 2.75" [69.9mm] | .47" [11.9mm] | .81" [20.5mm] | 3.68" [93.3mm] | 1.0" [25.4mm] | .43" [10.8mm] |

**Table 1**
Frangible Collar
Hex Size (Across Flats)

| Code | Hex Size |
|---|---|
| 219 | 7/32" |
| 250 | 1/4" |
| 312 | 5/16" |
| 343 | 11/32" |
| 375 | 3/8" |
| 437 | 7/16" |

**Table 2**
Ext'd.Socket Length

| Code | Extension |
|---|---|
| A | Flush |
| C | 0.375" |
| D | 0.500" |
| E | 0.625" |
| G | 1.0" |
| J | 2.0" |

**Table 3**
Key Hex Size

| Code | Size |
|---|---|
| 062 | 1/16" Hex Key |
| 078 | 5/64" Hex Key |
| 094 | 3/32" Hex Key |
| 125T | 1/8" Hex Key |

**Table 4**
Drive Shaft Extended Length

| Code | Length | Index Unit |
|---|---|---|
| A | - | With |
| B | - | Without |
| C | 2.0" | With |
| D | 2.0" | Without |
| G | 6.0" | With |
| H | 6.0" | Without |

24P

Example of Complete Tool Model Number:

**CTL1461 C 343 A 078**

- 078 — Hex Key Size (Table 3)
- A — Extended Socket Length (Table 2)
- 343 — Fastener Hex Size (Table 1)
- C — Ext'd. Drive Shaft (Table 4)
- CTL1461 — Tool Model Number

# Offset Pistol Grip Tools

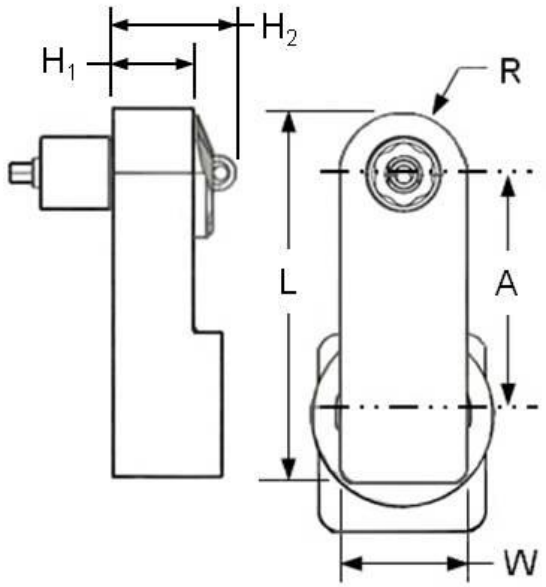


Torque Max: 170 in-lbs

RPM: 220
Sound level : 78dB(A)

| Model Number | No. of Gears | A | $H_1$ | $H_2$ | L | W | R |
|---|---|---|---|---|---|---|---|
| **CTL1415** | 3 | 1.62" [41.1mm] | .68" [17.3mm] | 1.0" [25.2mm] | 2.69" [68.3mm] | 1.0" (25.4mm) | .50" (12.2mm) |

The above tool model is designed for use with a flush socket gear or extended sockets.

**Table 1**
Frangible Collar
Hex Size (Across Flats)

| Code | Hex Size |
|---|---|
| 375 | 3/8" |
| 437 | 7/16" |
| 500 | 1/2" |
| 562 | 9/16" |

**Table 2**
Ext'd.Socket Length

| Code | Extension |
|---|---|
| C | 0.375" |
| D | 0.500" |
| E | 0.625" |
| G | 1.0" |
| J | 2.0" |

**Table 3**
Hex Keys
(See Table 5, Accessories)

| Code | Size |
|---|---|
| 094T | 3/32" Hex Key |
| 125T | 1/8" Dia. Hex Key |
| 156T | 5/32" Dia. Hex Key |
| 187T | 3/16" Dia. Hex Key |

**Table 4**
Drive Shaft Extended Length

| Code | Length | Index Unit |
|---|---|---|
| A | - | With |
| B | - | Without |
| C | 2.0" | With |
| D | 2.0" | Without |

Example of Complete Tool Model Number:

**CTL1415 A 500 G 156T**

- 156T — Hex Key Size (Table 3)
- G — Extended Socket Length (Table 2)
- 500 — Fastener Hex Size (Table 1)
- A — Ext'd. Drive Shaft (Table 4)
- CTL1415 — Tool Model Number



HOWMET AEROSPACE

# Offset Pistol Grip Tools

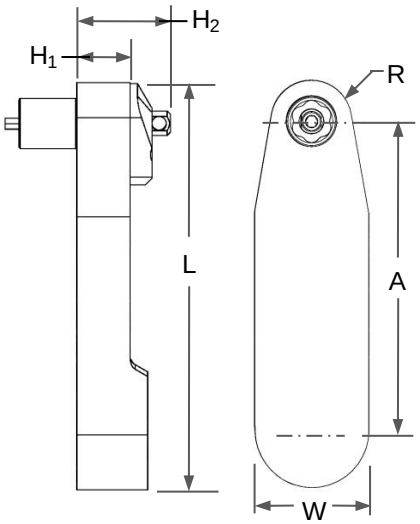


Tool Torque Range:
15-140 in-lbs.

360º
Index
Unit

RPM: 230
Sound level : 78dB(A)

| Model Number | No. of Gears | A | $H_1$ | $H_2$ Ref. | L | W | R |
|---|---|---|---|---|---|---|---|
| **CTL1111** | 5 | 2.75" [69.9mm] | .47" [11.9mm] | .72" [18.4mm] | 3.68" [93.3mm] | 1.0" [25.4mm] | .43" [10.8mm] |

**Table 1**
Frangible Collar
Hex Size (Across Flats)

| Code | Hex Size |
|---|---|
| 219 | 7/32" |
| 250 | 1/4" |
| 312 | 5/16" |
| 343 | 11/32" |
| 375 | 3/8" |
| 437 | 7/16" |

**Table 2**
Ext'd.Socket Length

| Code | Extension |
|---|---|
| A | Flush |
| C | 0.375" |
| D | 0.500" |
| E | 0.625" |
| G | 1.0" |
| J | 2.0" |

**Table 3**
Key Hex Size

| Code | Size |
|---|---|
| 062 | 1/16" Hex Key |
| 078 | 5/64" Hex Key |
| 094 | 3/32" Hex Key |
| 125T | 1/8" Hex Key |

**Table 4**
Drive Shaft Extended Length

| Code | Length | Index Unit |
|---|---|---|
| A | - | With |
| B | - | Without |
| C | 2.0" | With |
| D | 2.0" | Without |
| G | 6.0" | With |
| H | 6.0" | Without |

24P

**Example of Complete Tool Model Number:**

**CTL1111 C 343 A 078**

- 078 — Hex Key Size (Table 3)
- A — Extended Socket Length (Table 2)
- 343 — Fastener Hex Size (Table 1)
- C — Ext'd. Drive Shaft (Table 4)
- CTL1111 — Tool Model Number



HOWMET AEROSPACE

# Offset Pistol Grip Tools

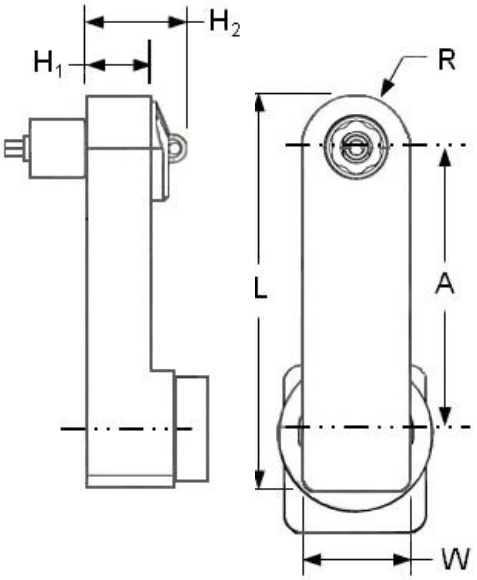


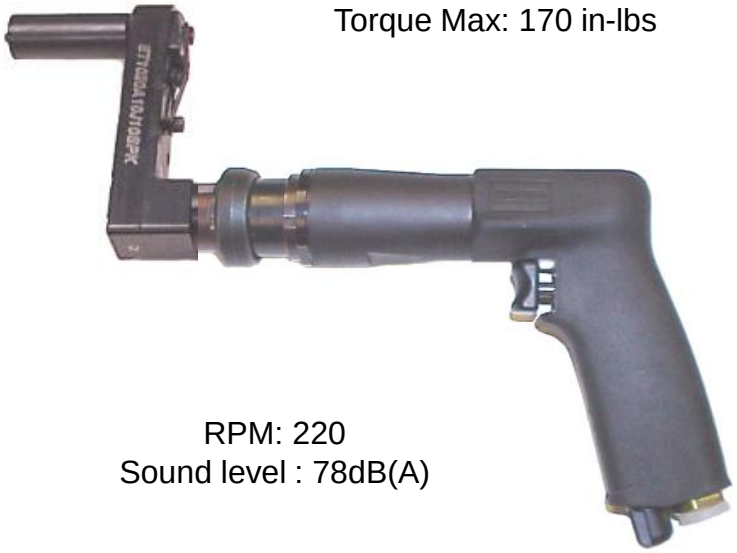

Torque Max: 170 in-lbs

RPM: 220
Sound level : 78dB(A)

| Model Number | No. of Gears | A | $H_1$ | $H_2$ (With Hex Key) | L | W | R |
|---|---|---|---|---|---|---|---|
| **CTL1420** | 5 | 3.38"" [85.9mm] | .68" [17.3mm] | 1.0" [25.4mm] | 4.44" [112.7mm] | 1.0" (25.4mm) | .50" (12.2mm) |

The above tool model is designed for use with a flush socket gear or extended sockets.

**Table 1**
Frangible Collar
Hex Size (Across Flats)

| Code | Hex Size |
|---|---|
| 375 | 3/8" |
| 437 | 7/16" |
| 500 | 1/2" |
| 562 | 9/16" |

**Table 2**
Ext'd.Socket Length

| Code | Extension |
|---|---|
| C | 0.375" |
| D | 0.500" |
| E | 0.625" |
| G | 1.0" |
| J | 2.0" |

**Table 3**
Hex Keys
(See Table 5, Accessories)

| Code | Size |
|---|---|
| 094T | 3/32" Hex Key |
| 125T | 1/8" Dia. Hex Key |
| 156T | 5/32" Dia. Hex Key |
| 187T | 3/16" Dia. Hex Key |

**Table 4**
Drive Shaft Extended Length

| Code | Length | Index Unit |
|---|---|---|
| A | - | With |
| B | - | Without |
| C | 2.0" | With |
| D | 2.0" | Without |

Example of Complete Tool Model Number:

**CTL1420 A 500 G 156T**

- 156T — Hex Key Size (Table 3)
- G — Extended Socket Length (Table 2)
- 500 — Fastener Hex Size (Table 1)
- A — Ext'd. Drive Shaft (Table 4)
- CTL1420 — Tool Model Number

# Offset Pistol Grip Tools

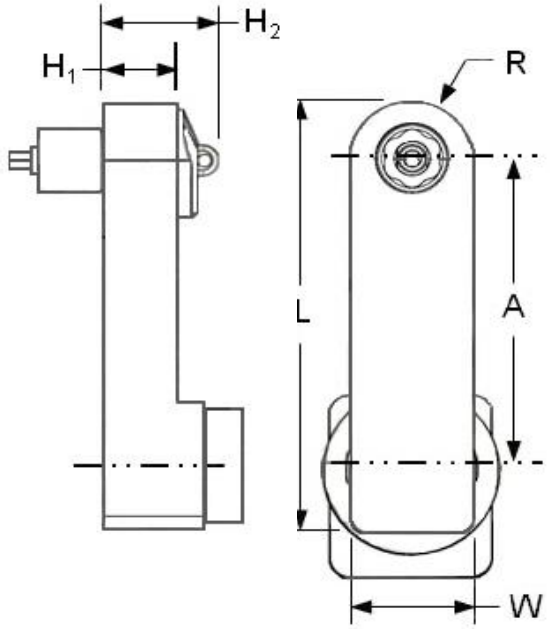


Torque Max: 210 in-lbs

RPM: 220
Sound level : 78dB(A)

| Model Number | No. of Gears | A | $H_1$ | $H_2$ (With Hex Key) | L | W | R |
|---|---|---|---|---|---|---|---|
| **CTL1436** | 7 | 5.13"" [130.3mm] | .68" [17.3mm] | 1.0" [25.4mm] | 6.19" [157.3mm] | 1.0" (25.4mm) | .50" (12.2mm) |

The above tool model is designed for use with a flush socket gear or extended sockets.

**Table 1**
Frangible Collar
Hex Size (Across Flats)

| Code | Hex Size |
|---|---|
| 375 | 3/8" |
| 437 | 7/16" |
| 500 | 1/2" |
| 562 | 9/16" |

**Table 2**
Ext'd.Socket Length

| Code | Extension |
|---|---|
| C | 0.375" |
| D | 0.500" |
| E | 0.625" |
| G | 1.0" |
| J | 2.0" |

**Table 3**
Hex Keys
(See Table 5, Accessories)

| Code | Size |
|---|---|
| 094T | 3/32" Hex Key |
| 125T | 1/8" Dia. Hex Key |
| 156T | 5/32" Dia. Hex Key |
| 187T | 3/16" Dia. Hex Key |

**Table 4**
Drive Shaft Extended Length

| Code | Length | Index Unit |
|---|---|---|
| A | - | With |
| B | - | Without |
| C | 2.0" | With |
| D | 2.0" | Without |

Example of Complete Tool Model Number:

**CTL1436 A 500 G 156T**

- 156T — Hex Key Size (Table 3)
- G — Extended Socket Length (Table 2)
- 500 — Fastener Hex Size (Table 1)
- A — Ext'd. Drive Shaft (Table 4)
- CTL1436 — Tool Model Number



HOWMET AEROSPACE

# Offset Pistol Grip Tools

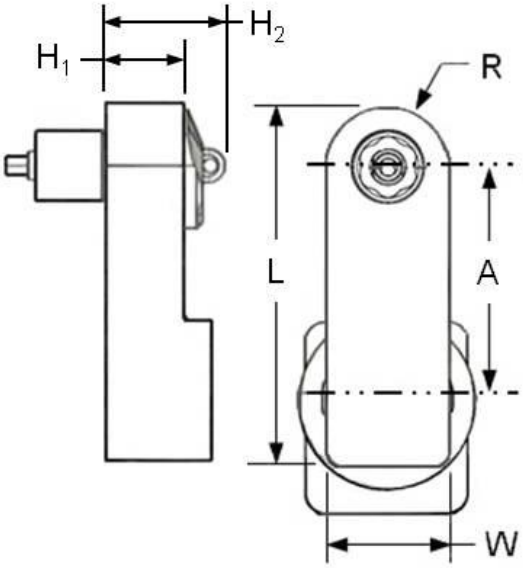


Torque Max: 210 in-lbs

Ref: LUM21HR01-K

RPM: 110
Sound level : 78dB(A)

| Model Number | No. of Gears | A | $H_1$ | $H_2$ | L | W | R |
|---|---|---|---|---|---|---|---|
| **CTH1415** | 3 | 1.62" [41.1mm] | .68" [17.3mm] | 1.0" [25.4mm] | 2.69" [68.3mm] | 1.0" (25.4mm) | .50" (12.2mm) |

The above tool model is designed for use with a flush socket gear or extended sockets.

**Table 1**
Frangible Collar
Hex Size (Across Flats)

| Code | Hex Size |
|---|---|
| 375 | 3/8" |
| 437 | 7/16" |
| 500 | 1/2" |
| 562 | 9/16" |

**Table 2**
Ext'd.Socket Length

| Code | Extension |
|---|---|
| C | 0.375" |
| D | 0.500" |
| E | 0.625" |
| G | 1.0" |
| J | 2.0" |

**Table 3**
Hex Keys
(See Table 5, Accessories)

| Code | Size |
|---|---|
| 094T | 3/32" Hex Key |
| 125T | 1/8" Dia. Hex Key |
| 156T | 5/32" Dia. Hex Key |
| 187T | 3/16" Dia. Hex Key |

**Table 4**
Drive Shaft Extended Length

| Code | Length | Index Unit |
|---|---|---|
| A | - | With |
| B | - | Without |
| C | 2.0" | With |
| D | 2.0" | Without |

Example of Complete Tool Model Number:

**CTH1415 A 500 G 156T**

- 156T — Hex Key Size (Table 3)
- G — Extended Socket Length (Table 2)
- 500 — Fastener Hex Size (Table 1)
- A — Ext'd. Drive Shaft (Table 4)
- CTH1415 — Tool Model Number

# Offset Pistol Grip Tools

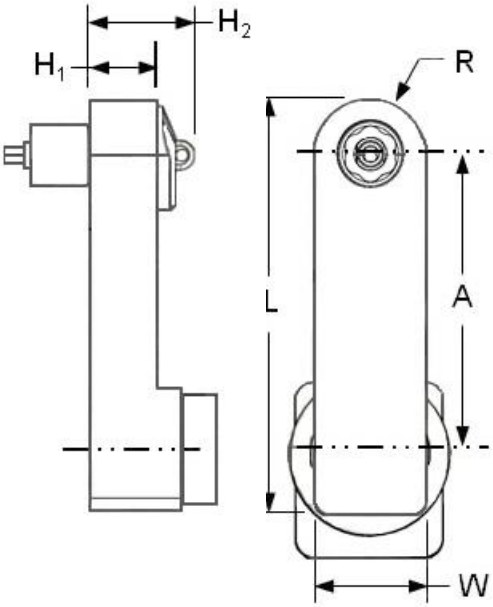

Torque Max: 210 in-lbs

Ref: LUM21HR01-K

RPM: 110
Sound level : 78dB(A)

| Model Number | No. of Gears | A | $H_1$ | $H_2$ (With Hex Key) | L | R |
|---|---|---|---|---|---|---|
| **CTH1420** | 5 | 3.38 [85.9mm] | .68 [17.3mm] | 1.0" [25.4mm] | 4.44 [113.0mm] | .50 [12.7mm] |

The above tool model is designed for use with a flush socket gear or extended sockets.

**Table 1**
Frangible Collar
Hex Size (Across Flats)

| Code | Hex Size |
|---|---|
| 375 | 3/8" |
| 437 | 7/16" |
| 500 | 1/2" |
| 562 | 9/16" |

**Table 2**
Ext'd.Socket Length

| Code | Extension |
|---|---|
| C | 0.375" |
| D | 0.500" |
| E | 0.625" |
| G | 1.0" |
| J | 2.0" |

**Table 3**
Hex Keys
(See Table 5, Accessories)

| Code | Size |
|---|---|
| 094T | 3/32" Hex Key |
| 125T | 1/8" Dia. Hex Key |
| 156T | 5/32" Dia. Hex Key |
| 187T | 3/16" Dia. Hex Key |

**Table 4**
Drive Shaft Extended Length

| Code | Length | Index Unit |
|---|---|---|
| A | - | With |
| B | - | Without |
| C | 2.0" | With |
| D | 2.0" | Without |

Example of Complete Tool Model Number:

**CTH1420 A 500 G 156T**

- 156T — Hex Key Size (Table 3)
- G — Extended Socket Length (Table 2)
- 500 — Fastener Hex Size (Table 1)
- A — Ext'd. Drive Shaft (Table 4)
- CTH1420 — Tool Model Number



HOWMET AEROSPACE

# Straight Pistol Grip Tools

Torque Max: 135 in-lbs

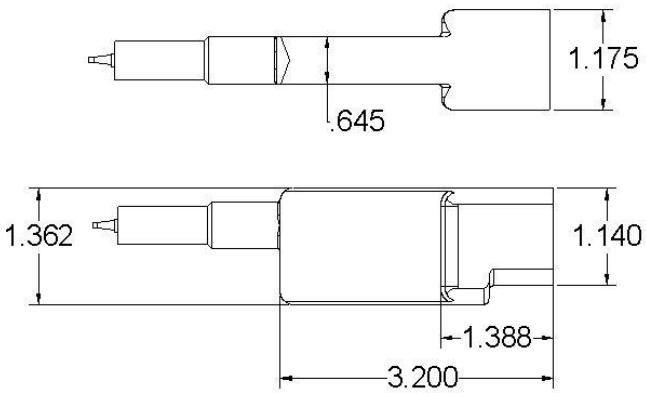


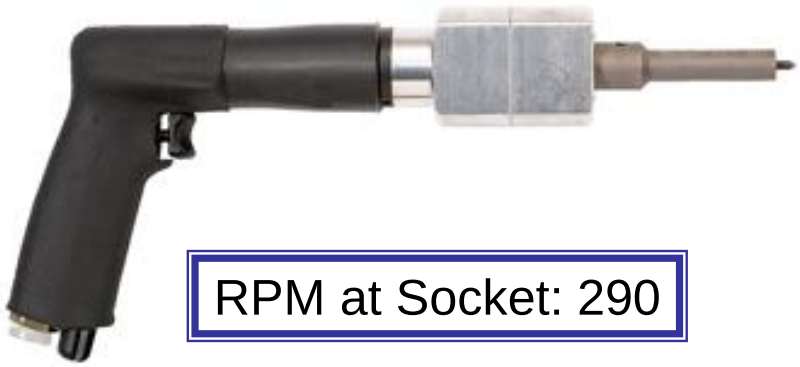

RPM at Socket: 290

**Table 1**
Frangible Collar
Hex Size (Across Flats)

| Code | Hex Size |
|---|---|
| 219 | 7/32" |
| 250 | 1/4" |
| 282 | 9/32" |
| 312 | 5/16" |
| 343 | 11/32" |

**Table 2**
Ext'd.Socket Length

| Code | Extension |
|---|---|
| J | 2.0" |
| L | 3.0" |
| P | 4.0" |

**Table 3**
Key Hex Size

| **Code** | **Size** | **Part No.** |
|---|---|---|
| 062 | 1/16" | 093-9450-062-CT |
| 078 | 5/64" | 093-9450-078-CT |
| 094 | 3/32" | 093-9450-094-CT |

Example of Complete Tool Model Number:

**CTL2028B 343 J 094**

- 094 — Hex Key Size (Table 3)
- J — Extended Socket Length (Table 2)
- 343 — Fastener Hex Size (Table 1)
- CTL2028B — Tool Model Number



HOWMET AEROSPACE

# Straight Pistol Grip Tools

Torque Max: 160 in-lbs

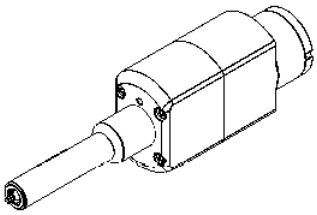

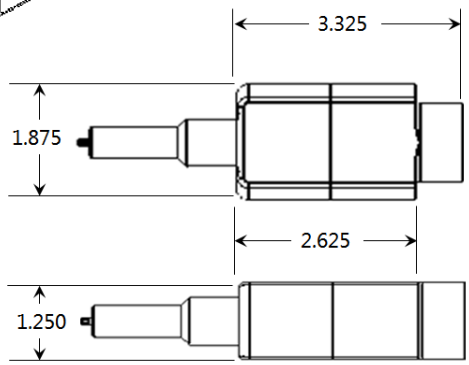

RPM at Socket: 290

**Table 1**
Frangible Collar
Hex Size (Across Flats)

| Code | Hex Size |
|---|---|
| 219 | 7/32" |
| 250 | 1/4" |
| 282 | 9/32" |
| 312 | 5/16" |
| 343 | 11/32" |
| 375 | 3/8" |
| 437 | 7/16" |
| | |

**Table 2**
Ext'd.Socket Length

| Code | Extension |
|---|---|
| J | 2.0" |
| L | 3.0" |
| P | 4.0" |

**Table 3**
Key Hex Size

| Code | Size |
|---|---|
| 062 | 1/16" Hex Key |
| 078 | 5/64" Hex Key |
| 094 | 3/32" Hex Key |
| | |
| | |
| | |

Example of Complete Tool Model Number:

**CT2005B 437 J 094**

- 094 — Hex Key Size (Table 3)
- J — Extended Socket Length (Table 2)
- 437 — Fastener Hex Size (Table 1)
- CT2005B — Tool Model Number

# Straight Pistol Grip Tools

Torque Max: 215 in-lbs

Tool Data:
Torque Capability: Up to 215 in. lbs. Maximum
Total Tool Length: 14.2" [ 360mm] without Socket
Total Wt: 3.62 lbs [ 1.64 kg ]

**Table 1**
Frangible Collar
Hex Size (Across Flats)

| Code | Hex Size |
|---|---|
| 375 | 3/8" |
| 437 | 7/16" |
| 500 | 1/2" |
| 562 | 9/16" |
| 625 | 5/8" |
| 750 | 3/4" |

**Table 2**
Ext'd.Socket Length

| Code | Extension |
|---|---|
| J | 2.0" |
| L | 3.0" |
| P | 4.0" |

**Table 3**
Key Hex Size

| Code | Size |
|---|---|
| 094 | 3/32" Hex Key |
| 125 | 1/8" Hex Key |
| 156 | 5/32" Hex Key |
| 187 | 3/16" Hex Key |

Example of Complete Tool Model Number:

**CTH2005B 437 J 156**

- 156 — Hex Key Size (Table 3)
- J — Extended Socket Length (Table 2)
- 437 — Fastener Hex Size (Table 1)
- CTH2005B — Tool Model Number

# Frangible Collar Assembly Tools

# 17° Offset Power Tools

## SECTION 2

Howmet Fastening Systems

HOWMET AEROSPACE

# 17° Offset Lever Tools

Torque Max: 130 in-lbs

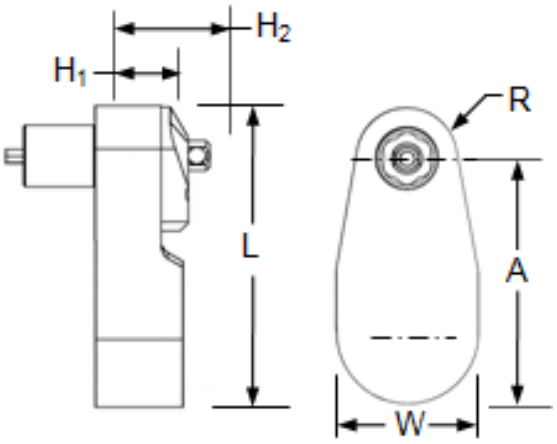


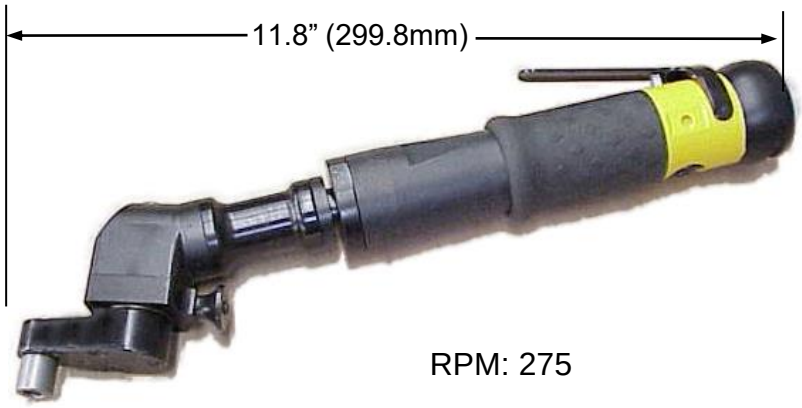


RPM: 275

| Model Number | No. of Gears | A | $H_1$ | $H_2$ | L | W | R |
|---|---|---|---|---|---|---|---|
| CTL3428 | 3 | 1.25" [31.8mm] | .47" [11.9mm] | .81" [20.5mm] | 2.11" [53.5mm] | 1.0" [25.4mm] | .35" [8.9mm] |

The above model tools are designed for use with extended sockets.

**Table 1**
Frangible Collar
Hex Size (Across Flats)

| Code | Hex Size |
|---|---|
| 219 | 7/32" |
| 250 | 1/4" |
| 312 | 5/16" |
| 343 | 11/32" |
| | |
| | |

**Table 2**
Ext'd.Socket Length

| Code | Extension |
|---|---|
| A | Flush |
| C | 0.375" |
| D | 0.500" |
| E | 0.625" |
| G | 1.0" |
| J | 2.0" |

**Table 3**
Key Hex Size

| Code | Size |
|---|---|
| 062 | 1/16" Hex Key |
| 078 | 5/64" Hex Key |
| 094 | 3/32" Hex Key |
| | |

24P

* Flush sockets only available in (.219, .250) hex sizes

Example of Complete Tool Model Number:

**CTL3428A 343 G 078**

- 078 — Hex Key Size (Table 3)
- G — Extended Socket Length (Table 2)
- 343 — Fastener Hex Size (Table 1)
- CTL3428A — Tool Model Number



HOWMET AEROSPACE

# 17° Offset Lever Tools

Torque Max: 145 in-lbs

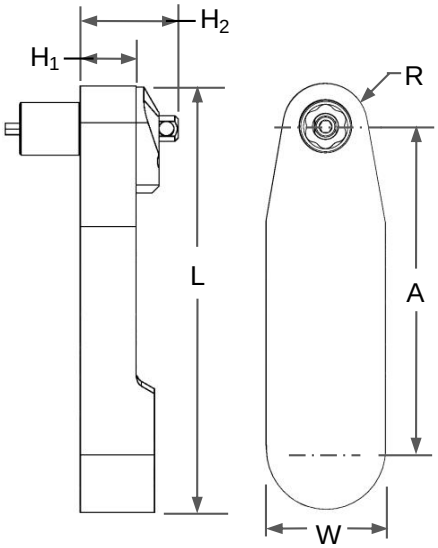


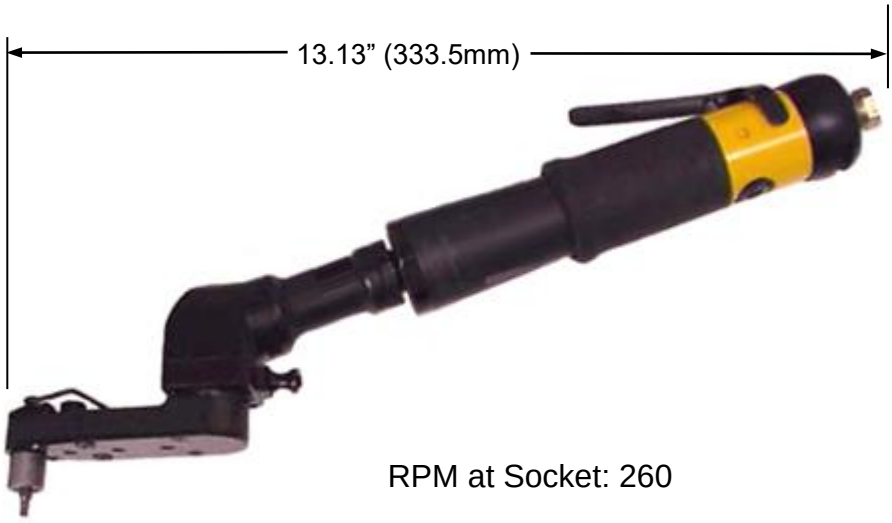


RPM at Socket: 260

| Model Number | No. of Gears | A | $H_1$ | $H_2$ | L | W | R |
|---|---|---|---|---|---|---|---|
| **CTL3429A** | 5 | 2.68" [68.1mm] | .47" [11.9mm] | .81" [20.5mm] | 3.53" [89.7mm] | 1.0" [25.4mm] | .35" [8.8mm] |

**Table 1**
Frangible Collar
Hex Size (Across Flats)

| Code | Hex Size |
|---|---|
| 219 | 7/32" |
| 250 | 1/4" |
| 312 | 5/16" |
| 343 | 11/32" |
| 375 | 3/8" |
| 437 | 7/16" |

**Table 2**
Ext'd.Socket Length

| Code | Extension |
|---|---|
| A * | Flush |
| C | 0.375" |
| D | 0.500" |
| E | 0.625" |
| F | 0.750" |
| G | 1.0" |
| J | 2.0" |

**Table 3**
Key Hex Size

| **Code** | **Size** |
|---|---|
| 062 | 1/16" Hex Key |
| 078 | 5/64" Hex Key |
| 094 | 3/32" Hex Key |
| | |

* Flush sockets only available in (.219, .250, .282, .312 ) hex sizes

Example of Complete Tool Model Number:

**CTL3429A 343 F 078**

- 078 — Hex Key Size (Table 3)
- F — Extended Socket Length (Table 2)
- 343 — Fastener Hex Size (Table 1)
- CTL3429A — Tool Model Number



HOWMET AEROSPACE

# 17° Offset Lever Tools

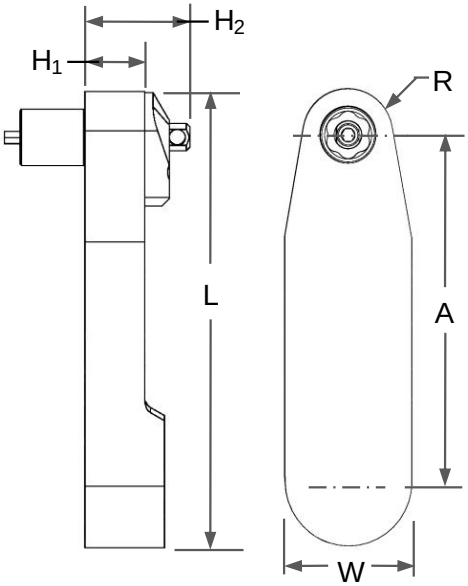


Torque Max: 120 in-lbs

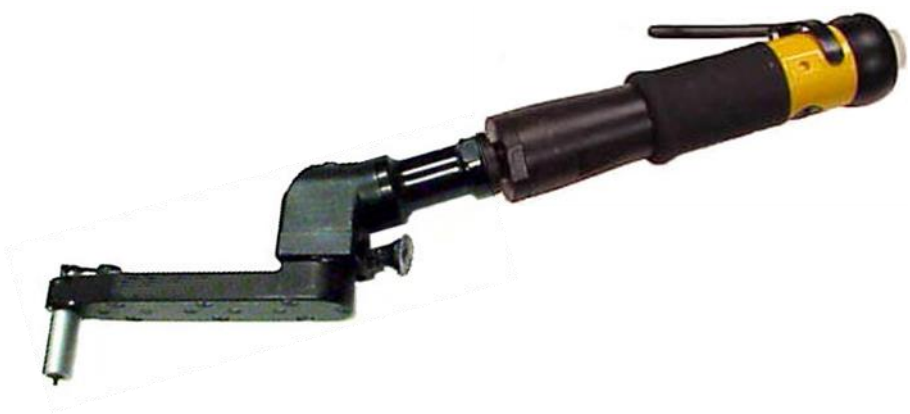

RPM at Socket: 275

| Model Number | No. of Gears | A | $H_1$ | $H_2$ | L | W | R |
|---|---|---|---|---|---|---|---|
| **CTL3438** | 7 | 4.13" [104.9mm] | .47" [11.9mm] | .81" [20.5mm] | 4.98" [126.5mm] | 1.0" [25.4mm] | .35" [8.8mm] |

**Table 1**
Frangible Collar
Hex Size (Across Flats)

| Code | Hex Size |
|---|---|
| 219 | 7/32" |
| 250 | 1/4" |
| 312 | 5/16" |
| 343 | 11/32" |
| 375 | 3/8" |
| 437 | 7/16" |

**Table 2**
Ext'd.Socket Length

| Code | Extension |
|---|---|
| A * | Flush |
| C | 0.375" |
| D | 0.500" |
| E | 0.625" |
| F | 0.750" |
| G | 1.0" |
| J | 2.0" |

**Table 3**
Key Hex Size

| Code | Size |
|---|---|
| 062 | 1/16" Hex Key |
| 078 | 5/64" Hex Key |
| 094 | 3/32" Hex Key |
| | |

* Flush sockets available in (.250, .282 & .312) hex sizes

Example of Complete Tool Model Number:

**CTL3438A 343 F 078**

- 078 — Hex Key Size (Table 3)
- F — Extended Socket Length (Table 2)
- 343 — Fastener Hex Size (Table 1)
- CTL3438A — Tool Model Number



HOWMET AEROSPACE

# 17° Offset Lever Tools

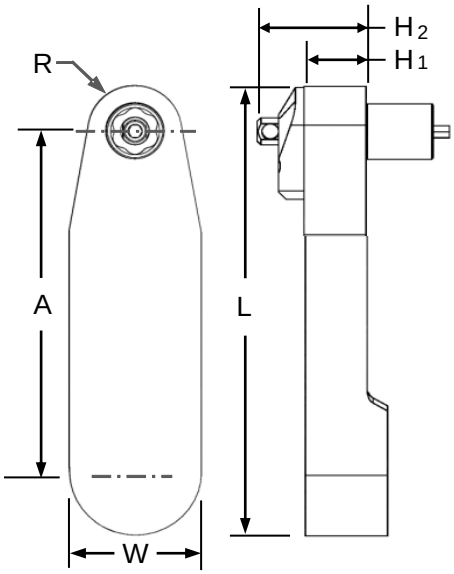


Torque Max: 120 in-lbs

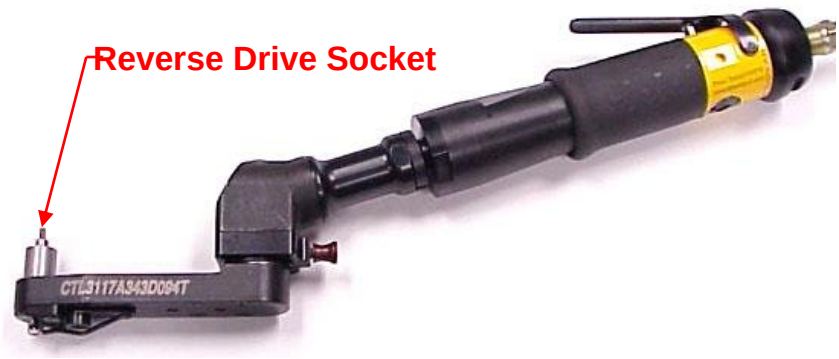


RPM at Socket: 275

| Model Number | No. of Gears | A | $H_1$ | $H_2$ | L | W | R |
|---|---|---|---|---|---|---|---|
| **CTL3424A** | 6 | 3.38" [85.8mm] | .47" [11.9mm] | .81" [20.5mm] | 4.05" [102.9mm] | 1.0" [25.4mm] | .35" [8.8mm] |

**Table 1**
Frangible Collar
Hex Size (Across Flats)

| Code | Hex Size |
|---|---|
| 219 | 7/32" |
| 250 | 1/4" |
| 312 | 5/16" |
| 343 | 11/32" |
| 375 | 3/8" |
| 437 | 7/16" |

**Table 2**
Ext'd.Socket Length

| Code | Extension |
|---|---|
| A* | Flush |
| C | 0.375" |
| D | 0.500" |
| E | 0.625" |
| F | 0.750" |
| G | 1.0" |
| J | 2.0" |

**Table 3**
Key Hex Size

| Code | Hex Size |
|---|---|
| 062 | 1/16" |
| 078 | 5/64" |
| 094 | 3/32" |
| | |

* Flush sockets available in (.220, .250, .282 & .312) hex sizes

Example of Complete Tool Model Number:

**CTL3424A 343 F 078**

- 078 — Hex Key Size (Table 3)
- F — Extended Socket Length (Table 2)
- 343 — Fastener Hex Size (Table 1)
- CTL3424A — Tool Model Number



HOWMET AEROSPACE

# 17° Offset Lever Tools

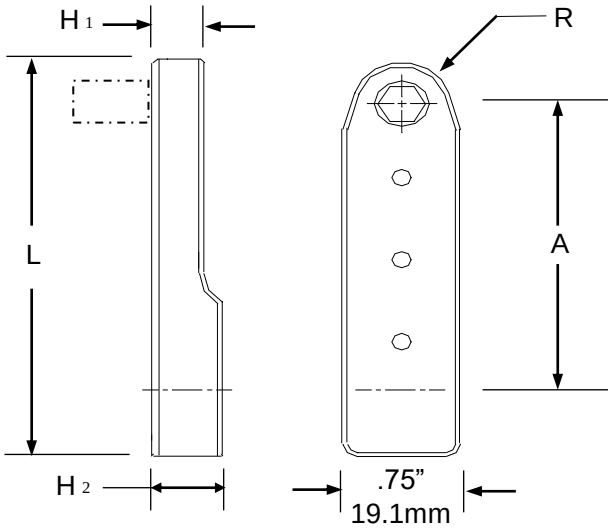


Torque Max: 80 in-lbs

| Model Number | No. of Gears | A | H1 | H2 | L | R |
|---|---|---|---|---|---|---|
| CTL3421 | 5 | 2.38 | .34 [8.6mm] | .46 | 4.18 [106.1mm] | .31 [7.9mm] |

**Table 1**
Hex Size (Across Flats)

| Code | Hex Size |
|---|---|
| 219 | 7/32" |
| 250 | 1/4" |

**Table 2**
Ext'd.Socket Length

| Code | Extension |
|---|---|
| A | Flush |
| B | 1/4" |
| C | 3/8" |
| D | 1/2" |

**Table 3a**
Key Hex Size

| Code | Size |
|---|---|
| 000 | No Key |
| 062 | 1/16" |
| 078 | 5/64" |

**Table 3b**
Aster™Key

| Code | Dia. |
|---|---|
| 000 | No Key |
| AK2 | -2 |
| AK3 | -3 |
| AK3A | -3A |

Example of Complete Tool Model Number:

**CTL3421A 312 D 000**

- 000 — Hex Key Size (Table 3a or 3b)
- D — Extended Socket Length (Table 2)
- 312 — Fastener Hex Size (Table 1)
- CTL3421A — Tool Model Number



HOWMET AEROSPACE

# 17° Offset Lever Tools

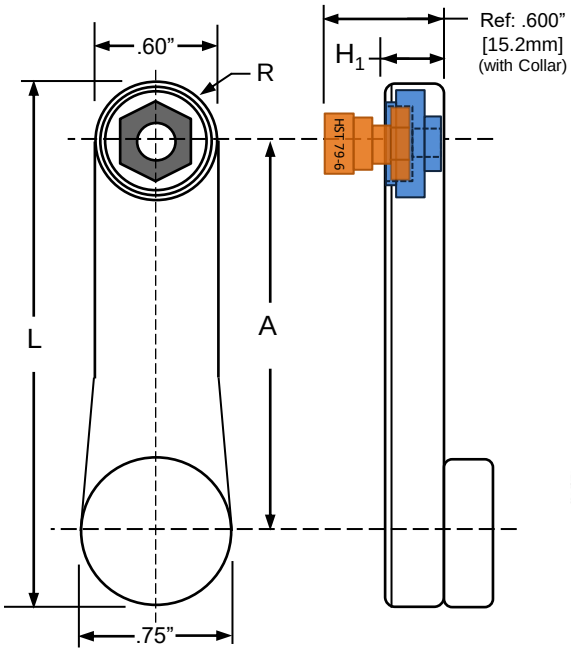


Torque Max: 90 in-lbs

| Model Number | No. of Gears | A | $H_1$ | L | R |
|---|---|---|---|---|---|
| CTL3707A | 5 | 1.97" [50.0mm] | .285" [7.2mm] | 2.65" [67.3mm] | .30" [7.6mm] |
| CTL3777A | 7 | 2.97" [75.4mm] | .285" [7.2mm] | 3.81" [96.8mm] | .30" [7.6mm] |

**Table 1**
Frangible Collar
Hex Size (Across Flats)

| Code | Hex Size |
|---|---|
| 219 | 7/32" |
| 250 | 1/4" |
| 312 | 5/16" |
| 343 | 11/32" |

**Table 2**
Ext'd.Socket
Length

| Code | Extension |
|---|---|
| A | Flush Sockets Only |

**Table 3**
Key Hex Size

| Code | Hex Size |
|---|---|
| 000 | NA |
| 062 | 1/16" |
| 078 | 5/64" |

This tool model is not recommended for use with extended sockets, please select another model if an extended socket is required.

Example of Complete Tool Model Number:

**CTL3707A 343 A 078**

- 078 — Hex Key Size (Table 3)
- A — Extended Socket Length (Table 2)
- 343 — Fastener Hex Size (Table 1)
- CTL3707A — Tool Model Number



HOWMET AEROSPACE

# 17° Offset Lever Tools

Torque Max: 145 in-lbs

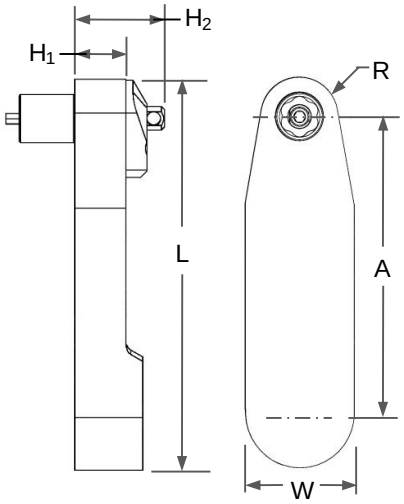


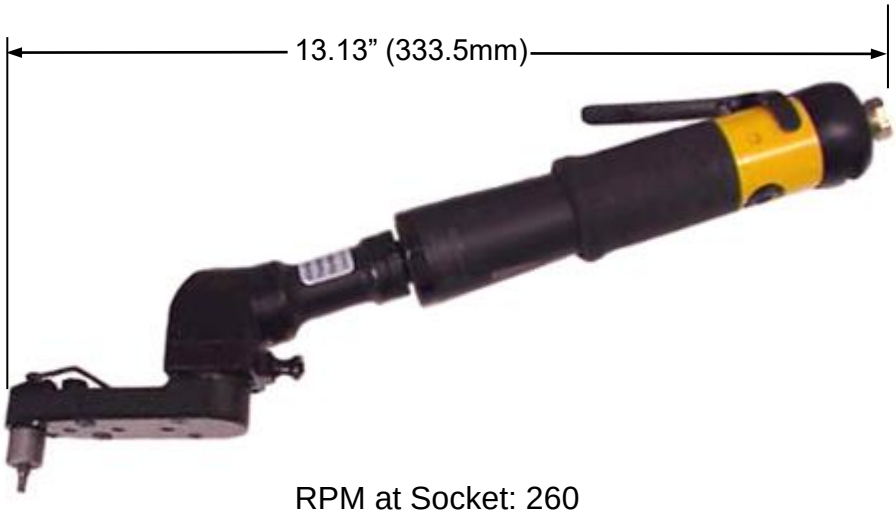


RPM at Socket: 260

| Model Number | No. of Gears | A | $H_1$ | $H_2$ | L | W | R |
|---|---|---|---|---|---|---|---|
| **CTL3439A** | 5 | 2.68" [68.1mm] | .38" [9.5mm] | .69" [17.5mm] | 3.53" [89.7mm] | 1.0" [25.4mm] | .35" [8.8mm] |

**Table 1**
Frangible Collar
Hex Size (Across Flats)

| Code | Hex Size |
|---|---|
| 219 | 7/32" |
| 250 | 1/4" |
| 312 | 5/16" |
| 343 | 11/32" |
| 375 | 3/8" |
| 437 | 7/16" |

**Table 2**
Ext'd.Socket Length

| Code | Extension |
|---|---|
| A * | Flush |
| C | 0.375" |
| D | 0.500" |
| E | 0.625" |
| F | 0.750" |
| G | 1.0" |
| J | 2.0" |

**Table 3**
Key Hex Size

| Code | Size |
|---|---|
| 062 | 1/16" Hex Key |
| 078 | 5/64" Hex Key |
| 094 | 3/32" Hex Key |
| | |

* Flush sockets only available in (.219, .250, .282, .312 ) hex sizes

Example of Complete Tool Model Number:

**CTL3439A 437 D 094**

- 094 — Hex Key Size (Table 3)
- D — Extended Socket Length (Table 2)
- 437 — Fastener Hex Size (Table 1)
- CTL3439A — Tool Model Number



HOWMET AEROSPACE

# 17° Offset Lever Tools

Torque Max: 145 in-lbs

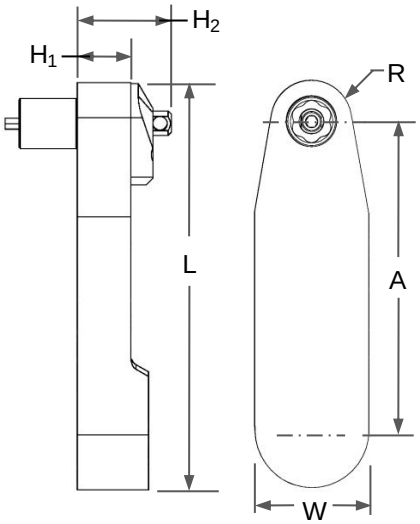


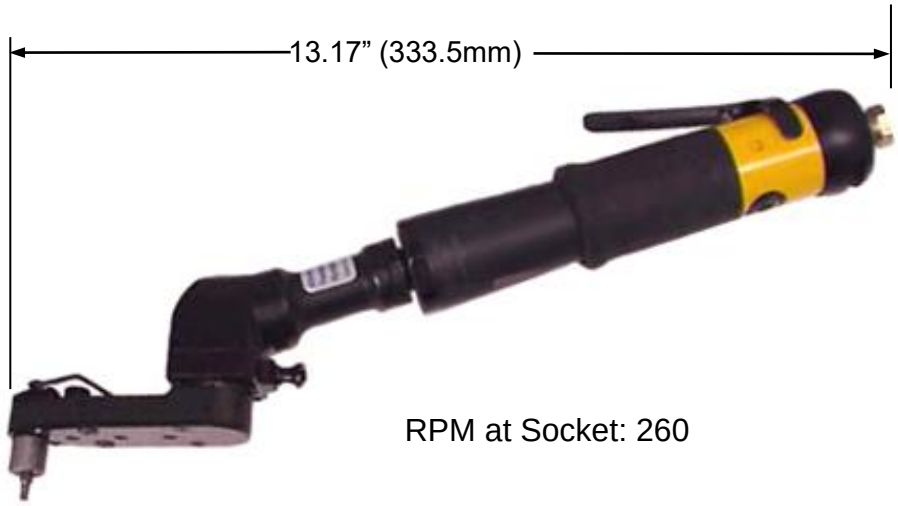


RPM at Socket: 260

| Model Number | No. of Gears | A | $H_1$ | $H_2$ | L | W | R |
|---|---|---|---|---|---|---|---|
| **CTL3452A** | 5 | 2.72" [69.1mm] | .47" [11.9mm] | .81" [20.5mm] | 3.70" [94.0mm] | 1.0" [25.4mm] | .39" [9.7mm] |

**Table 1**

Collar Hex Size

| Code | Dia. |
|---|---|
| 219 | -2 |
| 250 | -3 |
| 282 | -3A |
| 312 | -4 |

**Table 2**

Ext'd.Socket Length

| Code | Extension |
|---|---|
| A * | Flush |
| C | 0.375" |
| D | 0.500" |
| E | 0.625" |
| F | 0.750" |
| G | 1.0" |
| J | 2.0" |

**Table 3**

Key Hex Size

| **Code** | **Size** |
|---|---|
| 062 | 1/16" Hex Key |
| 078 | 5/64" Hex Key |
| 094 | 3/32" Hex Key |
| | |

**Table 3**

Aster™ Key

| **Code** | **Dia.** |
|---|---|
| 000 | No Key |
| AK2 | -2 |
| AK3 | -3 |
| AK3A | -3A |
| AK4 | -4 |

* Flush sockets only available in (.219, .250, .223, .312, .343 ) hex sizes

24P

Example of Complete Tool Model Number:

**CTL3452A 312 F 094**

- 094 — Hex Key or Aster™ Key Option (Table 3)
- F — Extended Socket Length (Table 2)
- 312 — Fastener Hex Size (Table 1)
- CTL3452A — Tool Model Number



HOWMET AEROSPACE

# 17° Offset Lever Tools

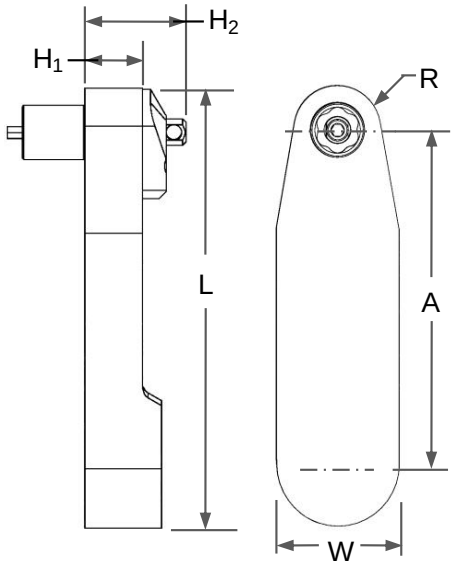

Torque Max: 150 in-lbs

RPM at Socket: 270

| Model Number | No. of Gears | A | $H_1$ | $H_2$ | L | W | R |
|---|---|---|---|---|---|---|---|
| **CTL3402A** | 5 | 2.75" [69.9mm] | .38" [9.71mm] | .73" [18.5mm] | 3.68" [93.3mm] | 1.0" [25.4mm] | .43" [10.8mm] |

The above model tools are designed for use with a flush socket gear or extended sockets.

**Table 1**
Frangible Collar
Hex Size (Across Flats)

| Code | Hex Size |
|---|---|
| 219 | 7/32" |
| 250 | 1/4" |
| 312 | 5/16" |
| 343 | 11/32" |
| 375 | 3/8" |
| 437 | 7/16" |

**Table 2**
Ext'd.Socket Length

| Code | Extension |
|---|---|
| A | Flush |
| C | 0.375" |
| D | 0.500" |
| E | 0.625" |
| G | 1.0" |
| J | 2.0" |

**Table 3**
Key Hex Size

| **Code** | **Size** |
|---|---|
| 078 | 5/64" Hex Key |
| 094 | 3/32" Hex Key |
| 125T | 1/8" Hex Key |

1/8" Hex key available on Models CT3110 and CT3111

Example of Complete Tool Model Number:

**CTL3402A 343 A 078**

- 078 — Hex Key Size (Table 3)
- A — Extended Socket Length (Table 2)
- 343 — Fastener Hex Size (Table 1)
- CTL3402A — Tool Model Number



HOWMET AEROSPACE

# 17° Offset Lever Tools

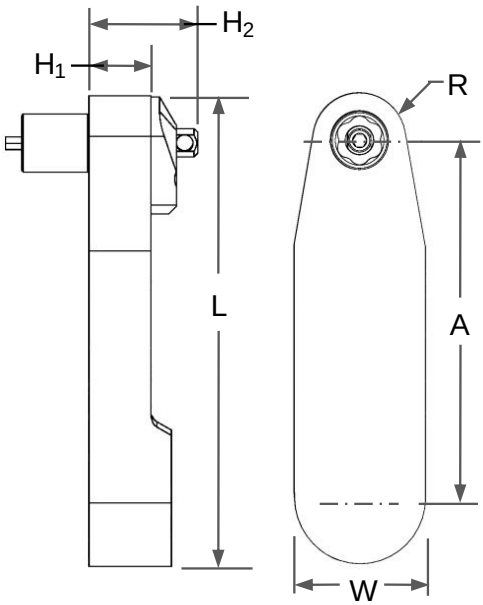

Torque Max: 150 in-lbs

RPM at Socket: 270

| Model Number | No. of Gears | A | $H_1$ | $H_2$ | L | W | R |
|---|---|---|---|---|---|---|---|
| **CTL3461A** | 5 | 2.75" [69.9mm] | .47" [11.9mm] | .81" [20.5mm] | 3.68" [93.3mm] | 1.0" [25.4mm] | .43" [10.8mm] |

The above model tools are designed for use with a flush socket gear or extended sockets.

**Table 1**
Frangible Collar
Hex Size (Across Flats)

| Code | Hex Size |
|---|---|
| 219 | 7/32" |
| 250 | 1/4" |
| 312 | 5/16" |
| 343 | 11/32" |
| 375 | 3/8" |
| 437 | 7/16" |

**Table 2**
Ext'd.Socket Length

| Code | Extension |
|---|---|
| A | Flush |
| C | 0.375" |
| D | 0.500" |
| E | 0.625" |
| G | 1.0" |
| J | 2.0" |

**Table 3**
Key Hex Size

| Code | Size |
|---|---|
| 078 | 5/64" Hex Key |
| 094 | 3/32" Hex Key |
| 125T | 1/8" Hex Key |

1/8" Hex key available on Models CT3110 and CT3111

Example of Complete Tool Model Number:

**CTL3461A 343 A 078**

- 078 — Hex Key Size (Table 3)
- A — Extended Socket Length (Table 2)
- 343 — Fastener Hex Size (Table 1)
- CTL3461A — Tool Model Number



HOWMET AEROSPACE

# 17° Offset Lever Tools

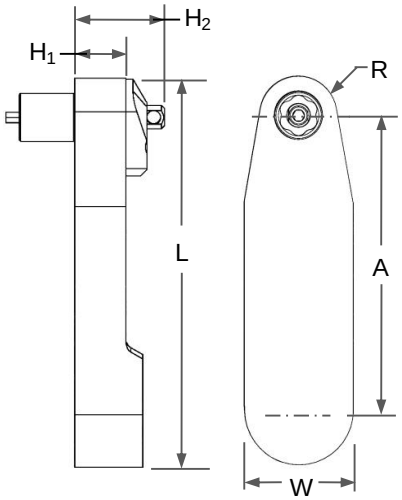

Torque Max: 150 in-lbs

RPM at Socket: 270

"Flush or Extended Socket Applications"

| Model Number | No. of Gears | A | $H_1$ | $H_2$ | L | W | R |
|---|---|---|---|---|---|---|---|
| **CTL3111A** | 5 | 2.75" [69.9mm] | .47" [11.9mm] | .78" [19.8mm] | 3.68" [93.3mm] | 1.0" [25.4mm] | .43" [10.8mm] |

The above model tools are designed for use with a flush socket gear or extended sockets.

**Table 1**
Frangible Collar Hex Size (Across Flats)

| Code | Hex Size |
|---|---|
| 219 | 7/32" |
| 250 | 1/4" |
| 312 | 5/16" |
| 343 | 11/32" |
| 375 | 3/8" |
| 437 | 7/16" |

**Table 2**
Ext'd.Socket Length

| Code | Extension |
|---|---|
| A | Flush |
| C | 0.375" |
| D | 0.500" |
| E | 0.625" |
| G | 1.0" |
| J | 2.0" |

**Table 3**
Key Hex Size

| Code | Size |
|---|---|
| 078T | 5/64" Hex Key |
| 094T | 3/32" Hex Key |
| 125T | 1/8" Hex Key |

## Example of Complete Tool Model Number:

**CTL3111 C 343 A 078**

- 078 — Hex Key Size (Table 3)
- A — Extended Socket Length (Table 2)
- 343 — Fastener Hex Size (Table 1)
- C — Ext'd. Drive Shaft (Table 4)
- CTL3111 — Tool Model Number

# 17° Offset Lever Tools

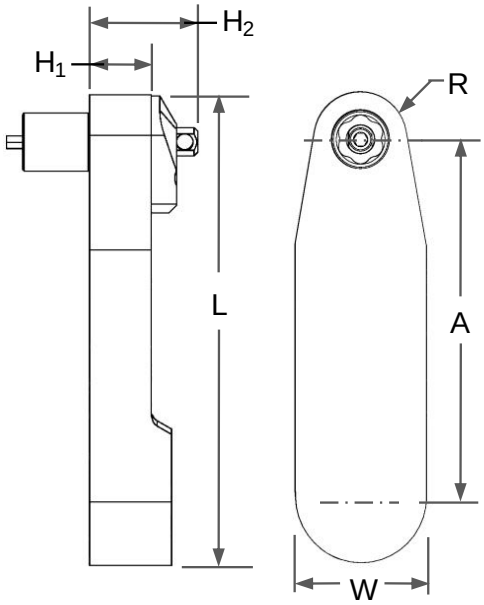


Torque Max: 230 in-lbs

Motor: LBB16S005 Mod.

RPM: 220 at socket

| Model Number | No. of Gears | A | $H_1$ | $H_2$ (Ref) | L | W | R |
|---|---|---|---|---|---|---|---|
| **CTL3498A** | 5 | 3.19 [81.0mm] | .50 [11.4mm] | .84 [21.5mm] | 4.5 [114.3mm] | 1.12 [28.4mm] | .43 [10.8mm] |

This is a very durable tool design for general purpose applications and is designed for use in a flush condition or with extended sockets and hex keys when required.

This gear head has 360° indexing capability.

**Table 1**

Frangible Collar

Hex Size (Across Flats)

| Code | Hex Size |
|---|---|
| 375 | 3/8" |
| 437 | 7/16" |
| 500 | 1/2" |
| 562 | 9/16" |

Max flush hex size is ½" A/F

**Table 2**

Ext'd.Socket Length

| Code | Extension |
|---|---|
| A | Flush |
| E | 0.625" |
| F | 0.750" |
| G | 1.0" |

**Table 3**

Key Hex Size

| **Code** | **Size** |
|---|---|
| 094 | 3/32" Hex Key |
| 125T | 1/8" Hex Key |
| | |

Example of Complete Tool Model Number:

CTL3498A 437 A 125T

- 125T — Hex Key Size (Table 3)
- A — Extended Socket Length (Table 2)
- 437 — Fastener Hex Size (Table 1)
- CTL3498A — Tool Model Number



HOWMET AEROSPACE

# 17° Offset Lever Tools

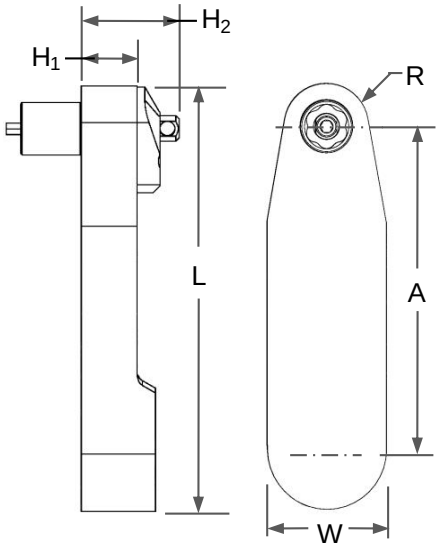


Torque Max: 270 in-lbs

Ref: LTV28N30-10

RPM at Socket: 290

| Model Number | No. of Gears | A | $H_1$ | $H_2$ (Ref) | L | W | R |
|---|---|---|---|---|---|---|---|
| **CT3498A** | 5 | 3.19 [81.0mm] | .50 [11.4mm] | .84 [21.5mm] | 4.5 [114.3mm] | 1.12 [28.4mm] | .43 [10.8mm] |

This is a very durable tool design for general purpose applications and is designed for use in a flush condition or with extended sockets and hex keys when required.

This gear head has 360° indexing capability.

**Table 1**

Frangible Collar

Hex Size (Across Flats)

| Code | Hex Size |
|---|---|
| 375 | 3/8" |
| 437 | 7/16" |
| 500 | 1/2" |
| 562 | 9/16" |
| 625 | 5/8" |

**Table 2**

Ext'd.Socket Length

| Code | Extension |
|---|---|
| A | Flush |
| D | 1/2" |
| E | 5/8" |
| F | 3/4" |
| G | 1.0" |

**Table 3**

Key Hex Size

| **Code** | **Hex Size** |
|---|---|
| 094 | 3/32" |
| 125T | 1/8" |
| 156T | 5/32" |

Example of Complete Tool Model Number:

CT3498A 437 A 125T

- 125T — Hex Key Size (Table 3)
- A — Extended Socket Length (Table 2)
- 437 — Fastener Hex Size (Table 1)
- CT3498A — Tool Model Number



HOWMET AEROSPACE

# 17° Offset Lever Tools

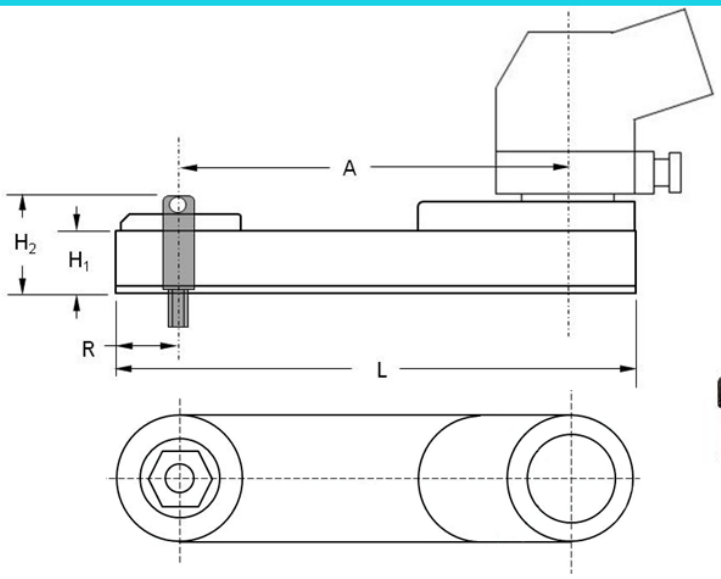


Torque Max: 310 in-lbs

Ref: LTV28N30-10 Mod.

| Model Number | No. of Gears | A | $H_1$ | $H_2$ | L | R | W |
|---|---|---|---|---|---|---|---|
| **CT3475A** | 5 | 3.23" [82.0mm] | .50" [12.7mm] | .84" [21.5mm] | 4.3" [109.2mm] | .50" [12.7mm] | 1.0" [25.4mm] |

**Table 1**
Frangible Collar
Hex Size (Across Flats)

| Code | Hex Size |
|---|---|
| 437 | 7/16" |
| 500 | 1/2" |
| 562 | 9/16" |

**Table 2**
Ext'd.Socket Length

| Code | Extension |
|---|---|
| A | Flush |
| E | 5/8" |
| G | 1.0" |
| J | 2.0" |

**Table 3**
Key Hex Size

| **Code** | **Size** |
|---|---|
| 000 | NA |
| 125T | 1/8" |
| 156T | 5/32" |

.500 Max A/F Flush Socket Gear

Example of Complete Tool Model Number:

CT3475 A 375 A 125T

- 125T — Ergo Hex Key Size (Table 3)
- A — Extended Socket Length (Table 2)
- 375 — Fastener Diameter (Table 1)
- A — With 360° Index Unit
- CT3475 — Tool Model Number



HOWMET AEROSPACE

# 17° Offset Lever Tools

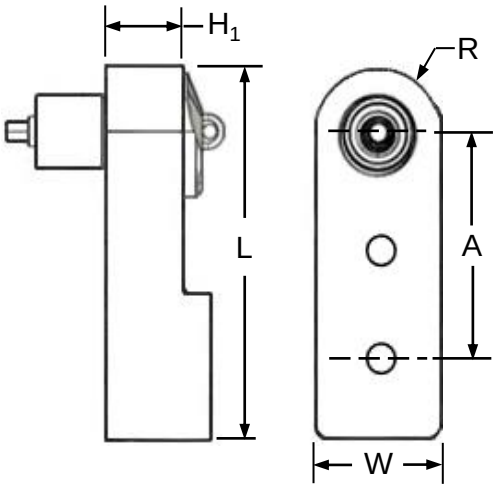


Torque Max: 320 in-lbs

LTV28N30-10

Free Speed RPM: 170

| Model Number | No. of Gears | A | $H_1$ | $H_2$ (Ref) | L | W | R |
|---|---|---|---|---|---|---|---|
| **CTL3493A** | 3 | 1.78" [45.2mm] | .69" [17.5mm] | 1.0" [25.4mm] | 2.97" [70.9mm] | 1.12" [28.6mm] | .59" [15.0mm] |

This is a very durable tool design for general purpose applications and is designed for use in a flush condition or with extended sockets and hex keys when required.

This gear head has 360° indexing capability.

**Table 1**
Frangible Collar
Hex Size (Across Flats)

| Code | Hex Size |
|---|---|
| 437 | 7/16" |
| 500 | 1/2" |
| 562 | 9/16" |
| 625 | 5/8" |
| 687 | 11/16" |
| 750 | 3/4" |

**Table 2**
Ext'd.Socket Length

| Code | Extension |
|---|---|
| A | Flush |
| E | 5/8" |
| G | 1.0" |
| J | 2.0" |

**Table 3**
Key Hex Size

| Code | Size |
|---|---|
| 000 | NA |
| 156T | 5/32" |
| 187T | 3/16" |
| 219T | 7/32" |
| 250T | 1/4" |

.687 Max A/F Flush Socket Gear

Example of Complete Tool Model Number:

CTL3493A 500 G 156T

- 156T — Hex Key Size (Table 3)
- G — Extended Socket Length (Table 2)
- 500 — Fastener Hex Size (Table 1)
- CTL3493A — Tool Model Number



HOWMET AEROSPACE

# 17° Offset Lever Tools

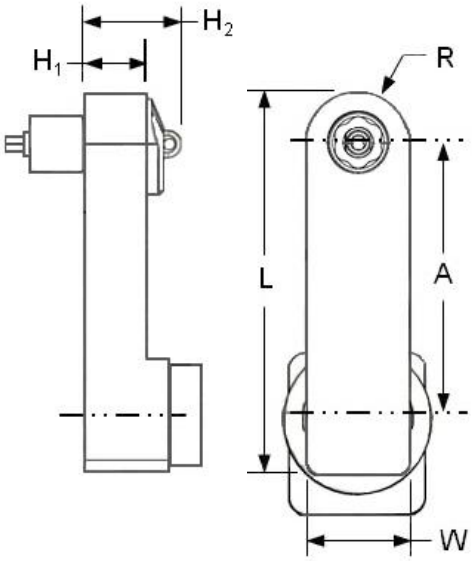


Torque Max: 320 in-lbs

Ref: LTV28N30-10 Mod.

RPM at Socket: 175

| Model Number | No. of Gears | A | $H_1$ | $H_2$ | L | R | W |
|---|---|---|---|---|---|---|---|
| **CTL3472A** | 5 | 3.0" [76.2mm] | .69" [17.5mm] | 1.0" [25.4mm] | 4.2" [106.4mm] | .56" [14.2mm] | 1.12" [28.4mm] |

Model CTL3472A is designed for use with a flush socket gear or extended sockets

**Table 1**
Frangible Collar
Hex Size (Across Flats)

| Code | Hex Size |
|---|---|
| 375 | 3/8" |
| 437 | 7/16" |
| 500 | 1/2" |
| 562 | 9/16" |
| 625 | 5/8" |
| 687 | 11/16" |

**Table 2**
Ext'd.Socket Length

| Code | Extension |
|---|---|
| A | Flush |
| E | 5/8" |
| G | 1.0" |
| J | 2.0" |

**Table 3**
Key Hex Size

| **Code** | **Size** |
|---|---|
| 000 | NA |
| 125T | 1/8" |
| 156T | 5/32" |
| 187T | 3/16" |
| 219T | 7/32" |
| 250T | 1/4" |

.687 Max A/F Flush Socket Gear

Example of Complete Tool Model Number:

CTL3472 A 625 D 156T

- 156T — Ergo Hex Key Size (Table 3)
- D — Extended Socket Length (Table 2)
- 625 — Fastener Diameter (Table 1)
- A — With 360° Index Unit
- CTL3472 — Tool Model Number



HOWMET AEROSPACE

# 17° Offset Lever Tools

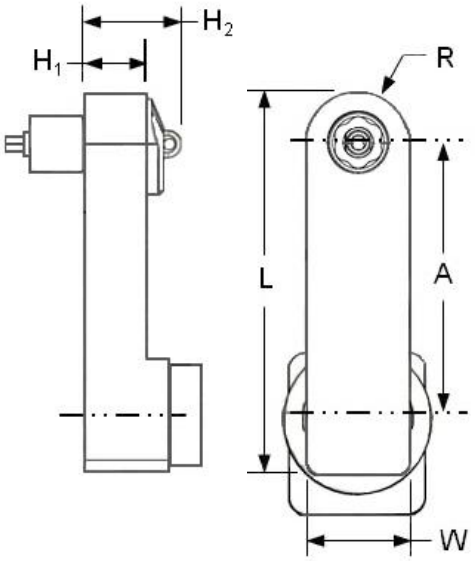


Torque Max: 320 in-lbs

Ref: LTV28N30-10 Mod.

RPM at Socket: 175

| Model Number | No. of Gears | A | $H_1$ | $H_2$ | L | R | W |
|---|---|---|---|---|---|---|---|
| **CTL3720A** | 5 | 3.0" [76.2mm] | .69" [17.5mm] | 1.0" [25.4mm] | 4.2" [106.4mm] | .56" [14.2mm] | 1.12" [28.4mm] |

Model CTL3720A is designed for use with a flush socket gear or extended sockets

**Table 1**
Frangible Collar
Hex Size (Across Flats)

| Code | Hex Size |
|---|---|
| 375 | 3/8" |
| 437 | 7/16" |
| 500 | 1/2" |
| 562 | 9/16" |
| 625 | 5/8" |
| 687 | 11/16" |

.687 Max A/F Flush Socket Gear

**Table 2**
Ext'd.Socket Length

| Code | Extension |
|---|---|
| A | Flush |
| E | 5/8" |
| G | 1.0" |
| J | 2.0" |

**Table 3**
Key Hex Size

| **Code** | **Size** |
|---|---|
| 000 | NA |
| 125T | 1/8" |
| 156T | 5/32" |
| 187T | 3/16" |
| 219T | 7/32" |
| 250T | 1/4" |

Example of Complete Tool Model Number:

CTL3720 A 625 D 156T

- 156T — Ergo Hex Key Size (Table 3)
- D — Extended Socket Length (Table 2)
- 625 — Fastener Diameter (Table 1)
- A — With 360° Index Unit
- CTL3720 — Tool Model Number



HOWMET AEROSPACE

# 17° Offset Lever Tools

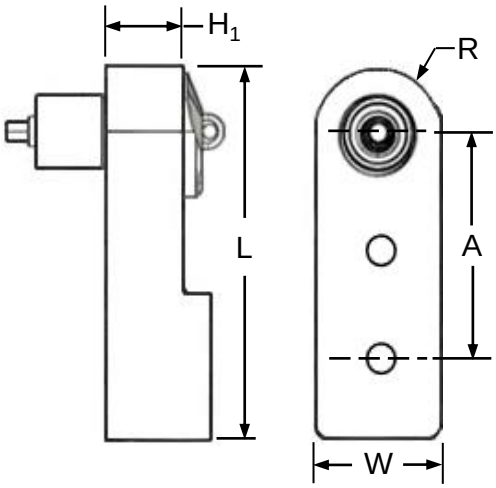


Torque Max: 500 in-lbs

LTV38N68-13
Atlas Motor Required

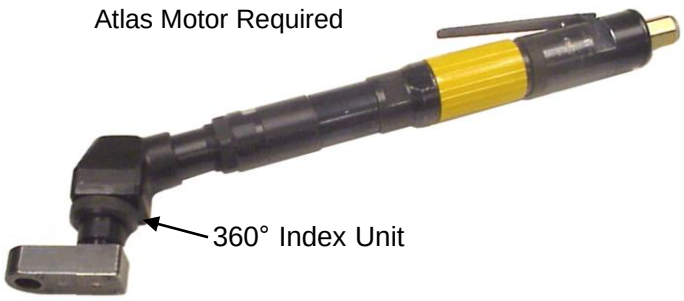


Free Speed RPM: 170

| Model Number | No. of Gears | A | $H_1$ | $H_2$ (Ref) | L | W | R |
|---|---|---|---|---|---|---|---|
| **CT3493A** | 3 | 1.78" [45.2mm] | .69" [17.5mm] | 1.0" [25.4mm] | 2.97" [70.9mm] | 1.12" [28.6mm] | .59" [15.0mm] |

This is a very durable tool design for general purpose applications and is designed for use in a flush condition or with extended sockets and hex keys when required.

This gear head has 360° indexing capability.

**Table 1**
Frangible Collar
Hex Size (Across Flats)

| Code | Hex Size |
|---|---|
| 437 | 7/16" |
| 500 | 1/2" |
| 562 | 9/16" |
| 625 | 5/8" |
| 687 | 11/16" |
| 750 | 3/4" |

**Table 2**
Ext'd.Socket Length

| Code | Extension |
|---|---|
| A | Flush |
| E | 5/8" |
| G | 1.0" |
| J | 2.0" |

**Table 3**
Key Hex Size

| Code | Size |
|---|---|
| 000 | NA |
| 156T | 5/32" |
| 187T | 3/16" |
| 219T | 7/32" |
| 250T | 1/4" |

.687 Max A/F Flush Socket Gear

Example of Complete Tool Model Number:

CT3493A 500 G 156T

- 156T — Hex Key Size (Table 3)
- G — Extended Socket Length (Table 2)
- 500 — Fastener Hex Size (Table 1)
- CT3493A — Tool Model Number



HOWMET AEROSPACE

# 17° Offset Lever Tools

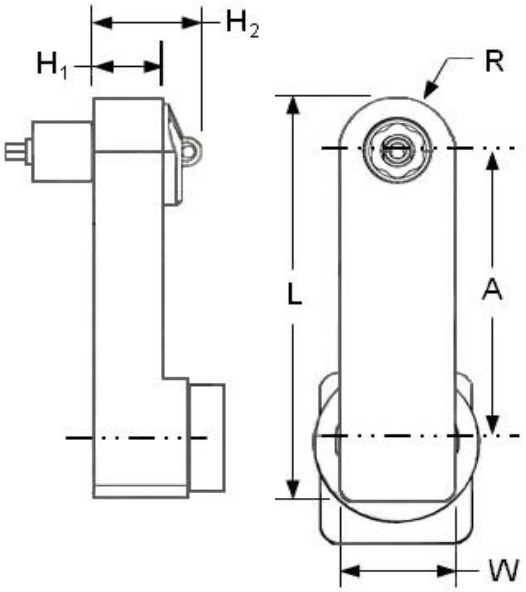


Torque Max: 520 in-lbs

Ref: LTV38N68-13 Mod.

RPM at Socket: 100

| Model Number | No. of Gears | A | $H_1$ | $H_2$ (Ref) | L | W | R |
|---|---|---|---|---|---|---|---|
| **CT3472A** | 5 | 3.00" [76.2mm] | .69" [17.5mm] | 1.0" [25.4mm] | 4.2" [106.4mm] | 1.12" [28.4mm] | .56" [14.2mm] |

**Table 1**
Frangible Collar
Hex Size (Across Flats)

| Code | Hex Size |
|---|---|
| 437 | 7/16" |
| 500 | 1/2" |
| 562 | 9/16" |
| 625 | 5/8" |
| 687 | 11/16" |
| 750 | 3/4" |

**Table 2**
Ext'd.Socket Length

| Code | Extension |
|---|---|
| A | Flush |
| E | 5/8" |
| G | 1.0" |
| J | 2.0" |

**Table 3**
Key Hex Size

| **Code** | **Size** |
|---|---|
| 000 | NA |
| 125T | 1/8" |
| 156T | 5/32" |
| 187T | 3/16" |
| 219T | 7/32" |
| 250T | 1/4" |

.687 Max A/F Flush Socket Gear

Example of Complete Tool Model Number:

CT3472 A 625 D 156T

- 156T — Ergo Hex Key Size (Table 3)
- D — Extended Socket Length (Table 2)
- 625 — Fastener Diameter (Table 1)
- A — With 360° Index Unit
- CT3472 — Tool Model Number



HOWMET AEROSPACE

# 17° Offset Lever Tools

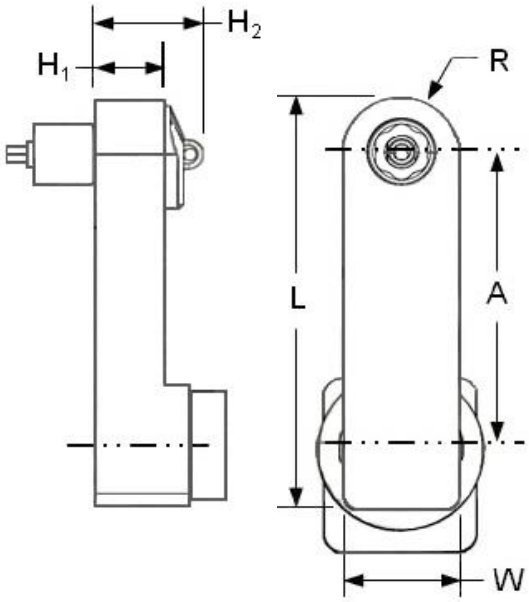


Torque Max: 400 in-lbs

RPM at Socket: 100

| Model Number | No. of Gears | A | $H_1$ | $H_2$ (Ref) | L | W | R |
|---|---|---|---|---|---|---|---|
| **CT3720A** | 7 | 3.69" [93.6mm] | .69" [17.5mm] | 1.0" [25.4mm] | 4.88" [124.0mm] | 1.12" [28.4mm] | .59" [15.0mm] |

Model CT3720A is designed for use with a flush socket gear or extended sockets

**Table 1**
Frangible Collar
Hex Size (Across Flats)

| Code | Hex Size |
|---|---|
| 437 | 7/16" |
| 500 | 1/2" |
| 562 | 9/16" |
| 625 | 5/8" |
| 687 | 11/16" |
| 750 | 3/4" |

**Table 2**
Ext'd.Socket Length

| Code | Extension |
|---|---|
| A | Flush |
| E | 5/8" |
| G | 1.0" |
| J | 2.0" |

**Table 3**
Key Hex Size

| **Code** | **Size** |
|---|---|
| 000 | NA |
| 125T | 1/8" |
| 156T | 5/32" |
| 187T | 3/16" |
| 219T | 7/32" |
| 250T | 1/4" |

.687 Max A/F Flush Socket Gear

Example of Complete Tool Model Number:

CT3720 A 562 F 187T

- 187T — Ergo Hex Key Size (Table 3)
- F — Extended Socket Length (Table 2)
- 562 — Fastener Diameter (Table 1)
- A — With 360° Index Unit
- CT3720 — Tool Model Number

# Frangible Collars Assembly Tools

# 90° Offset Power Tools

**SECTION 3**

Howmet Fastening Systems

HOWMET AEROSPACE

# 90° Offset Lever Tools

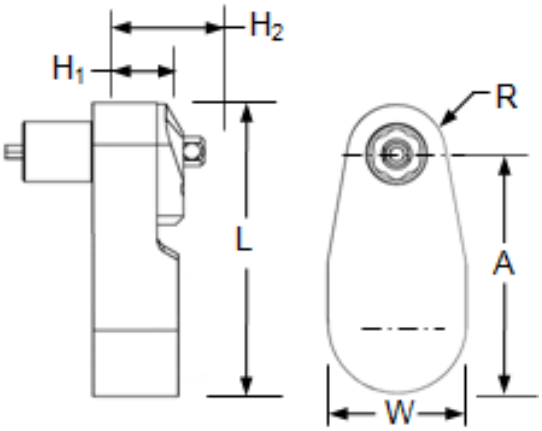


Torque Max: 140 in-lbs

250 RPM at Socket

| Model Number | No. of Gears | A | $H_1$ | $H_2$ | L | W | R |
|---|---|---|---|---|---|---|---|
| CTL5428A | 3 | 1.25" [31.8mm] | .47" [11.9mm] | .81" [20.5mm] | 2.1" [53.3mm] | 1.0" [25.4mm] | .35" [8.8mm] |

This is a very durable tool design for general purpose applications and is designed for use in a flush condition or with extended sockets and hex keys when required.

This gear head has 360° indexing capability.

**Table 1**
Frangible Collar
Hex Size (Across Flats)

| Code | Hex Size |
|---|---|
| 219 | 7/32" |
| 250 | 1/4" |
| 282 | 9/32" |
| 312 | 5/16" |
| 343 | 11/32" |
| 375 | 3/8" |
| 437 | 7/16" |

**Table 2**
Ext'd.Socket Length

| Code | Extension |
|---|---|
| A * | Flush |
| C | 0.375" |
| D | 0.500" |
| E | 0.625" |
| F | 0.750" |
| G | 1.0" |
| J | 2.0" |

**Table 3**
Key Hex Size

| Code | Size | Hex Key P/N |
|---|---|---|
| 062T | 1/16" 2-Pc Hex Key | 093-9337 |
| 078T | 5/64" 2-Pc Hex Key | 093-9334 |
| 094T | 3/32" 2-Pc Hex Key | 093-9333 |

| | | |
|---|---|---|
| 062 | 1/16" 1-Pc Hex Key | Depends on socket length |
| 078 | 5/64" 1-Pc Hex Key | |
| 094 | 3/32" 1-Pc Hex Key | |

* Flush sockets only available in (.219, .250, .282, .312 ) hex sizes

24P

Example of Complete Tool Model Number:

CTL5428A 250 C 078

- 078 — Hex Key Size (Table 3)
- C — Extended Socket Length (Table 2)
- 250 — Fastener Hex Size (Table 1)
- CTL5428A — Tool Model Number



HOWMET AEROSPACE

# 90° Offset Lever Tools

Torque Max: 145 in-lbs

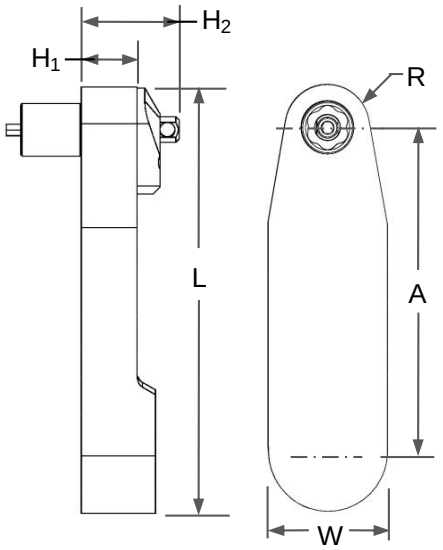

RPM at Socket: 260

| Model Number | No. of Gears | A | $H_1$ | $H_2$ | L | W | R |
|---|---|---|---|---|---|---|---|
| **CTL5439A** | 5 | 2.68" [68.1mm] | .38" [9.5mm] | .69" [17.5mm] | 3.53" [89.7mm] | 1.0" [25.4mm] | .35" [8.8mm] |

**Table 1**
Frangible Collar
Hex Size (Across Flats)

| Code | Hex Size |
|---|---|
| 219 | 7/32" |
| 250 | 1/4" |
| 312 | 5/16" |
| 343 | 11/32" |
| 375 | 3/8" |
| 437 | 7/16" |

**Table 2**
Ext'd.Socket Length

| Code | Extension |
|---|---|
| A * | Flush |
| C | 0.375" |
| D | 0.500" |
| E | 0.625" |
| F | 0.750" |
| G | 1.0" |
| J | 2.0" |

**Table 3**
Key Hex Size

| Code | Size |
|---|---|
| 062 | 1/16" Hex Key |
| 078 | 5/64" Hex Key |
| 094 | 3/32" Hex Key |
| | |

* Flush sockets only available in (.219, .250, .282, .312 ) hex sizes

Example of Complete Tool Model Number:

**CTL5439A 437 D 094**

- 094 — Hex Key Size (Table 3)
- D — Extended Socket Length (Table 2)
- 437 — Fastener Hex Size (Table 1)
- CTL5439A — Tool Model Number



HOWMET AEROSPACE

# 90° Offset Lever Tools

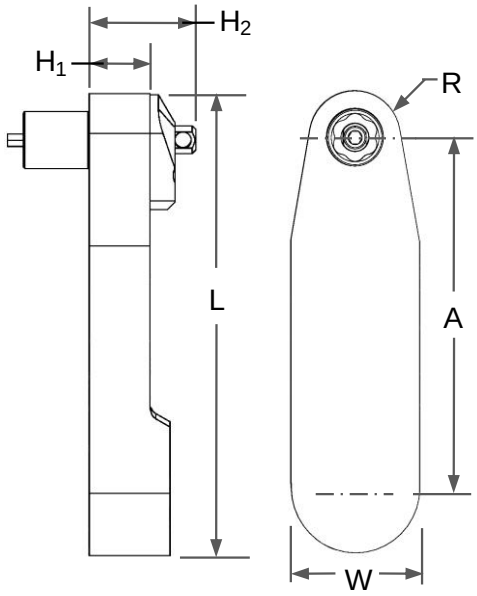


Torque Max: 140 in-lbs

| Model Number | No. of Gears | A | $H_1$ | $H_2$ | L | W | R |
|---|---|---|---|---|---|---|---|
| **CTL5429A** | 5 | 2.68" [68.1mm] | .47" [11.9mm] | .81" [20.5mm] | 3.53" [89.7mm] | 1.0" [25.4mm] | .35" [8.8mm] |

**Table 1**
Frangible Collar
Hex Size (Across Flats)

| Code | Hex Size |
|---|---|
| 219 | 7/32" |
| 250 | 1/4" |
| 282 | 9/32" |
| 312 | 5/16" |
| 343 | 11/32" |
| 375 | 3/8" |
| 437 | 7/16" |

**Table 2**
Ext'd.Socket Length

| Code | Extension |
|---|---|
| A* | Flush |
| C | 0.375" |
| D | 0.500" |
| E | 0.625" |
| F | 0.750" |
| G | 1.0" |
| J | 2.0" |

**Table 3**
Key Hex Size

| Code | Size |
|---|---|
| 062 | 1/16" Hex Key |
| 078 | 5/64" Hex Key |
| 094 | 3/32" Hex Key |
| 125T | 1/8" Hex Key |

* Flush sockets only available in (.219, .250, .282, .312 ) hex sizes

24P

Example of Complete Tool Model Number:

CTL5429A 437 F 094

- 094 — Hex Key Size (Table 3)
- F — Extended Socket Length (Table 2)
- 437 — Fastener Hex Size (Table 1)
- CTL5429A — Tool Model Number



HOWMET AEROSPACE

# 90° Offset Lever Tools

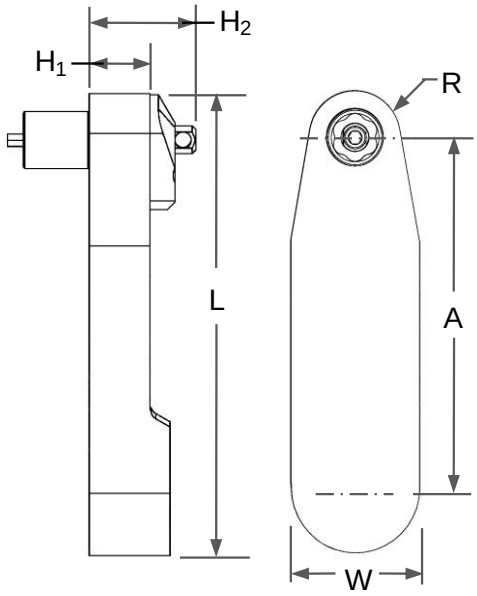


Torque Max: 140 in-lbs

| Model Number | No. of Gears | A | H1 | H2 | L | W | R |
|---|---|---|---|---|---|---|---|
| **CTL5452A** | 5 | 2.72" [69.1mm] | .47" [11.9mm] | .81" [20.5mm] | 3.70" [94.0mm] | 1.0" [25.4mm] | .39" [9.7mm] |

**Table 1**
Frangible Collar
Hex Size (Across Flats)

| Code | Hex Size |
|---|---|
| 219 | 7/32" |
| 250 | 1/4" |
| 282 | 9/32" |
| 312 | 5/16" |
| 343 | 11/32" |
| 375 | 3/8" |
| 437 | 7/16" |

**Table 2**
Ext'd.Socket Length

| Code | Extension |
|---|---|
| A * | Flush |
| C | 0.375" |
| D | 0.500" |
| E | 0.625" |
| F | 0.750" |
| G | 1.0" |
| J | 2.0" |

**Table 3**
Key Hex Size

| Code | Size |
|---|---|
| 062 | 1/16" Hex Key |
| 078 | 5/64" Hex Key |
| 094 | 3/32" Hex Key |
| 125T | 1/8" Hex Key |

* Flush sockets only available in (.219, .250, .282, .312, .343 ) hex sizes

24P

Example of Complete Tool Model Number:

CTL5452A 437 F 094

- 094 — Hex Key Size (Table 3)
- F — Extended Socket Length (Table 2)
- 437 — Fastener Hex Size (Table 1)
- CTL5452A — Tool Model Number



HOWMET AEROSPACE

# 90° Offset Lever Tools

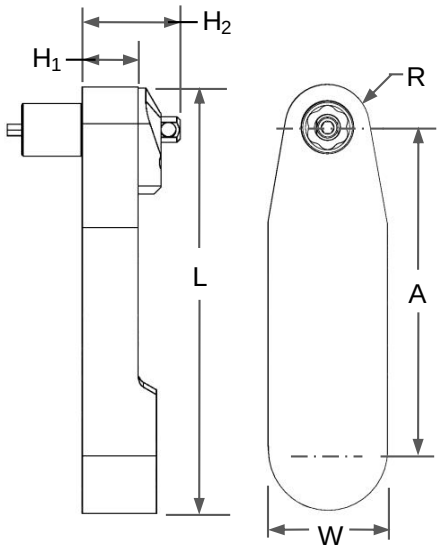


150 in lbs Max.

| Model Number | No. of Gears | A | $H_1$ | $H_2$ | L | R |
|---|---|---|---|---|---|---|
| **CTL5461A** | 5 | 2.75 [69.9mm] | .47 [11.9mm] | .61 [15.4mm] | 3.68 [93.3mm] | .43 [10.8mm] |

This is a very durable tool design for general purpose applications and is designed for use in a flush condition or with extended sockets and hex keys when required.

This gear head has 360° indexing capability.

**Table 1**
Frangible Collar
Hex Size (Across Flats)

| Code | Hex Size |
|---|---|
| 219 | 7/32" |
| 250 | 1/4" |
| 282 | 9/32" |
| 312 | 5/16" |
| 343 | 11/32" |
| 375 | 3/8" |
| 437 | 7/16" |

**Table 2**
Ext'd.Socket Length

| Code | Extension |
|---|---|
| A * | Flush |
| C | 0.375" |
| D | 0.500" |
| E | 0.625" |
| F | 0.750" |
| G | 1.0" |
| J | 2.0" |

**Table 3**
Key Hex Size

| Code | Size |
|---|---|
| 062 | 1/16" Hex Key |
| 078 | 5/64" Hex Key |
| 094 | 3/32" Hex Key |
| 125T | 1/8" Hex Key |

* Flush sockets only available in (.219, .250, .282, .312 ) hex sizes

Example of Complete Tool Model Number:

CTL5461A 312 C 078

- 078 — Hex Key Size (Table 3)
- C — Extended Socket Length (Table 2)
- 312 — Fastener Hex Size (Table 1)
- CTL5461A — Tool Model Number



HOWMET AEROSPACE

# 90° Offset Lever Tools

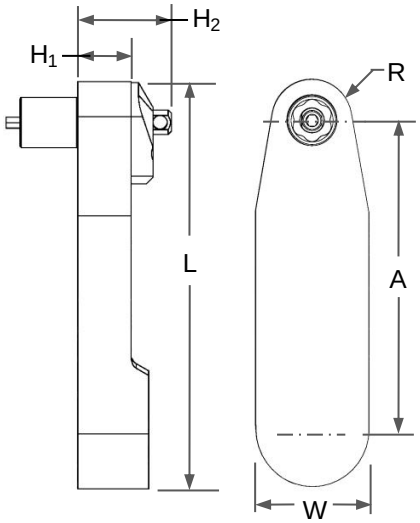


***150 in lbs Max.***

| Model Number | No. of Gears | A | $H_1$ | $H_2$ | L | R |
|---|---|---|---|---|---|---|
| **CTL5111A** | 5 | 2.75 [69.9mm] | .47 [11.9mm] | .61 [15.4mm] | 3.68 [93.3mm] | .43 [10.8mm] |

This is a very durable tool design for general purpose applications and is designed for use in a flush condition or with extended sockets and hex keys when required.
This gear head has 360° indexing capability.

**Table 1**
Frangible Collar
Hex Size (Across Flats)

| Code | Hex Size |
|---|---|
| 219 | 7/32" |
| 250 | 1/4" |
| 282 | 9/32" |
| 312 | 5/16" |
| 343 | 11/32" |
| 375 | 3/8" |
| 437 | 7/16" |

**Table 2**
Ext'd.Socket Length

| Code | Extension |
|---|---|
| A * | Flush |
| C | 0.375" |
| D | 0.500" |
| E | 0.625" |
| F | 0.750" |
| G | 1.0" |
| J | 2.0" |

**Table 3**
Key Hex Size

| Code | Size |
|---|---|
| 062T | 1/16" Hex Key |
| 078T | 5/64" Hex Key |
| 094T | 3/32" Hex Key |
| 125T | 1/8" Hex Key |

* Flush sockets only available in (.219, .250, .282, .312 ) hex sizes

24P

## Example of Complete Tool Model Number:

**CTL5111 C 343 A 078**

- 078 — Hex Key Size (Table 3)
- A — Extended Socket Length (Table 2)
- 343 — Fastener Hex Size (Table 1)
- C — Ext'd. Drive Shaft (Table 4)
- CTL5111 — Tool Model Number



HOWMET AEROSPACE

# 90º Offset Lever Tools

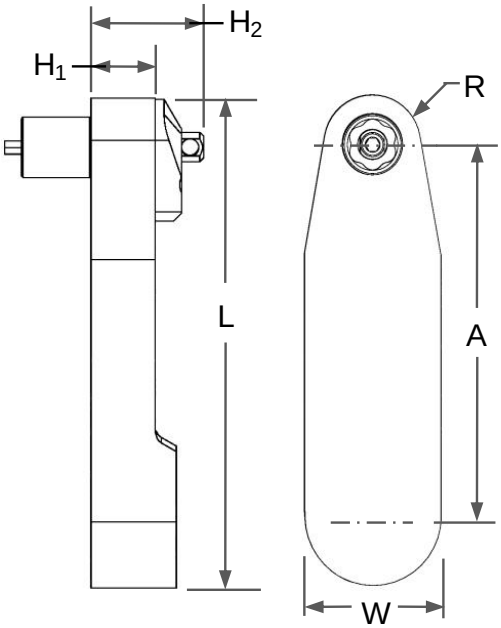


Torque Max: 140 in-lbs

| Model Number | No. of Gears | A | $H_1$ | $H_2$ | L | W | R |
|---|---|---|---|---|---|---|---|
| **CTL5438** | 7 | 4.13" [104.9mm] | .47" [11.9mm] | .81" [20.5mm] | 4.98" [126.5mm] | 1.0" [25.4mm] | .35" [8.8mm] |

**Table 1**
Frangible Collar
Hex Size (Across Flats)

| Code | Hex Size |
|---|---|
| 219 | 7/32" |
| 250 | 1/4" |
| 282 | 9/32" |
| 312 | 5/16" |
| 343 | 11/32" |
| 375 | 3/8" |
| 437 | 7/16" |

**Table 2**
Ext'd.Socket Length

| Code | Extension |
|---|---|
| A * | Flush |
| C | 0.375" |
| D | 0.500" |
| E | 0.625" |
| F | 0.750" |
| G | 1.0" |
| J | 2.0" |

**Table 3**
Key Hex Size

| Code | Size |
|---|---|
| 062 | 1/16" Hex Key |
| 078 | 5/64" Hex Key |
| 094 | 3/32" Hex Key |
| | |

* Flush sockets only available in (.219, .250, .282, .312 ) hex sizes

Example of Complete Tool Model Number:

CTL5438A 437 F 094

- 094 — Hex Key Size (Table 3)
- F — Extended Socket Length (Table 2)
- 437 — Fastener Hex Size (Table 1)
- CTL5438A — Tool Model Number



HOWMET AEROSPACE

# 90° Offset Lever Tools

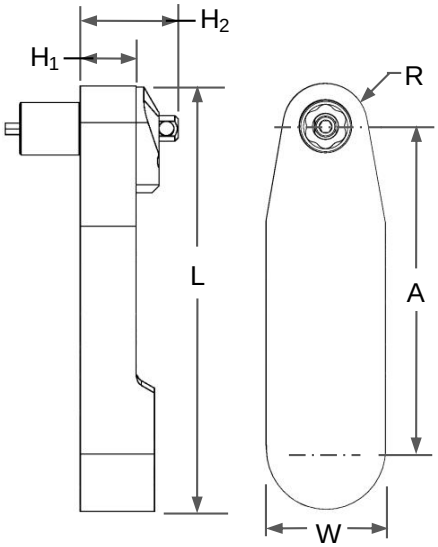


220 in lbs Max.

| Model Number | No. of Gears | A | $H_1$ | $H_2$ | L | W | R |
|---|---|---|---|---|---|---|---|
| **CTL5498A** | 5 | 3.19" [81.0mm] | .50" [12.7mm] | .84" [21.5mm] | 4.5" [114.3mm] | 1.12" [28.4mm] | .43" [10.8mm] |

This is a very durable tool design for general purpose applications and is designed for use in a flush condition or with extended sockets and hex keys when required.

This gear head has 360° indexing capability.

**Table 1**

Frangible Collar Hex Size (Across Flats)

| Code | Hex Size |
|---|---|
| 375 | 3/8" |
| 437 | 7/16" |
| 500 | 1/2" |
| 562 | 9/16" |

**Table 2**

Ext'd.Socket Length

| Code | Extension |
|---|---|
| A | Flush |
| D | 0.500" |
| E | 0.625" |
| F | 0.750" |
| G | 1.0" |

**Table 3**

Key Hex Size

| Code | Size |
|---|---|
| 094 | 3/32" Hex Key |
| 125T | 1/8" Hex Key |
| 156T | 5/32" Hex Key |

Example of Complete Tool Model Number:

CTL5498A 375 E 125T

- 125T — Hex Key Size (Table 3)
- E — Extended Socket Length (Table 2)
- 375 — Fastener Hex Size (Table 1)
- CTL5498A — Tool Model Number



HOWMET AEROSPACE

# 90° Offset Lever Tools

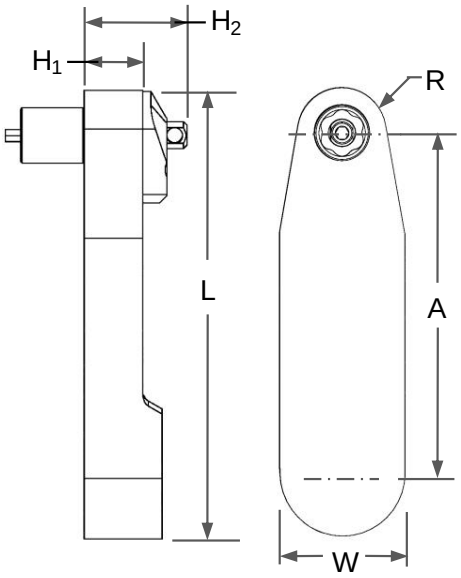


260 in lbs Max.

Ref: LTV28N30 Series

| Model Number | No. of Gears | A | H1 | H2 (Ref) | L | W | R |
|---|---|---|---|---|---|---|---|
| **CT5498A** | 5 | 3.19 [81.0mm] | .50 [12.7mm] | .84" [21.5mm] | 4.5 [114.3mm] | 1.12 [28.4mm] | .43 [10.8mm] |

This is a very durable tool design for general purpose applications and is designed for use in a flush condition or with extended sockets and hex keys when required.

This gear head has 360° indexing capability.

**Table 1**

Frangible Collar

Hex Size (Across Flats)

| Code | Hex Size |
|---|---|
| 375 | 3/8" |
| 437 | 7/16" |
| 500 | 1/2" |
| 562 | 9/16" |

**Table 2**

Ext'd.Socket Length

| Code | Extension |
|---|---|
| A | Flush |
| D | 0.500" |
| E | 0.625" |
| F | 0.750" |
| G | 1.0" |

**Table 3**

Key Hex Size

| Code | Size |
|---|---|
| 094 | 3/32" Hex Key |
| 125T | 1/8" Hex Key |
| 156T | 5/32" Hex Key |

Example of Complete Tool Model Number:

CT5498A 475 G 125T

- 125T — Hex Key Size (Table 3)
- G — Extended Socket Length (Table 2)
- 475 — Fastener Hex Size (Table 1)
- CT5498A — Tool Model Number



HOWMET AEROSPACE

# 90° Offset Lever Tools

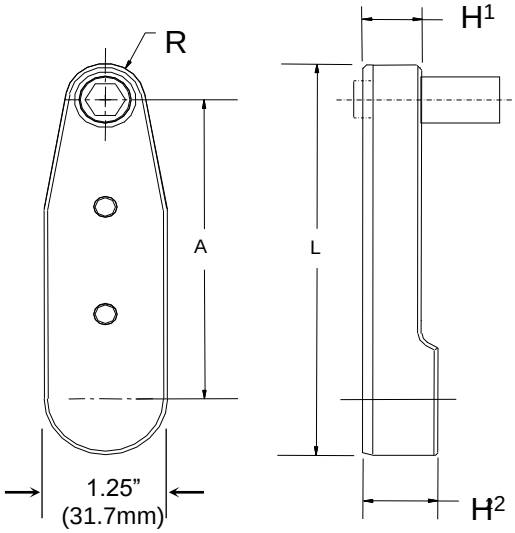


Torque: 260 in-lbs

Ref: LTV28N30 Series

| Model Number | No. of Gears | A | $H_1$ | $H_2$ | L | R |
|---|---|---|---|---|---|---|
| **CT5478** | 4 | 2.35 [59.6mm] | .50 [12.7mm] | .65 [16.7mm] | 3.7 [92.8mm] | .437 [11.1mm] |

This is a very durable tool design for general purpose applications and is designed for use in a flush condition or with extended sockets and hex keys when required.

This gear head has 360° indexing capability.

**Table 1**

Frangible Collar

Hex Size (Across Flats)

| Code | Hex Size |
|---|---|
| 375 | 3/8" |
| 437 | 7/16" |
| 500 | 1/2" |
| 562 | 9/16" |

**Table 2**

Ext'd.Socket Length

| Code | Extension |
|---|---|
| A | Flush |
| D | 0.500" |
| E | 0.625" |
| F | 0.750" |
| G | 1.0" |

**Table 3**

Key Hex Size

| Code | Size |
|---|---|
| 094 | 3/32" Hex Key |
| 125T | 1/8" Hex Key |
| 156T | 5/32" Hex Key |

Example of Complete Tool Model Number:

CT5478X 437 E 125T

- 125T — Hex Key Size (Table 3)
- E — Extended Socket Length (Table 2)
- 437 — Fastener Hex Size (Table 1)
- CT5478X — Tool Model Number



HOWMET AEROSPACE

# 90° Offset Lever Tools



130 in lbs Max

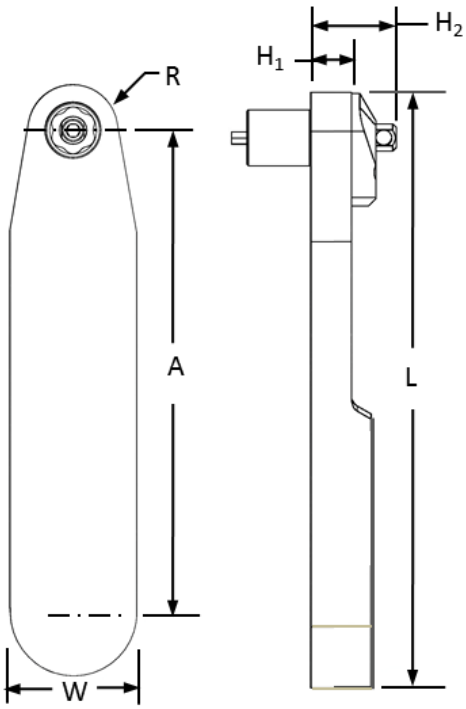


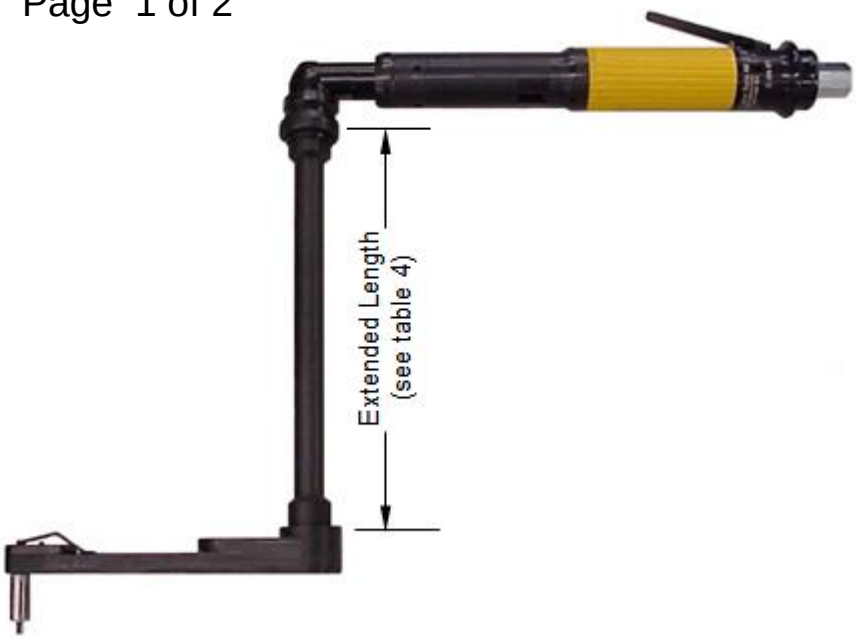


| Model Number | No. of Gears | A | $H_1$ | $H_2$ | L | R | W (Front) |
|---|---|---|---|---|---|---|---|
| **CT5705** | 9 | 6.59" [167.4mm] | .43" [10.9mm] | .73" [18.5mm] | 7.6" [193mm] | .35" [8.9mm] | 1.0" [25.4mm] |

**Table 1**
Frangible Collar Hex Size (Across Flats)

| Code | Hex Size |
|---|---|
| 219 | 7/32" |
| 250 | 1/4" |
| 312 | 5/16" |
| 343 | 11/32" |
| 375 | 3/8" |
| 437 | 7/16" |

**Table 2**
Ext'd.Socket Length

| Code | Extension |
|---|---|
| A | Flush |
| C | 3/8" |
| D | 1/2" |
| E | 5/8" |
| G | 1.0" |
| J | 2.0" |

**Table 3**
Key Hex Size

| Code | Size |
|---|---|
| 078 | 5/64" Hex Key |
| 094 | 3/32" Hex Key |
| | |

**Table 4**
Extended Drive Shaft with 360° Index Capability

| Code | Extension |
|---|---|
| A | 1-1/2" |
| E | 4.0" |
| G | 6.0" |
| K | 12.0" |

Example of Complete Tool Model Number:

CT5705 G 437 F 094

- 094 — Hex Key Size (Table 3)
- F — Extended Socket Length (Table 2)
- 437 — Fastener Hex Size (Table 1)
- G — Ext'd Drive Shaft-Index (Table 4)
- CT5705 — Tool Model Number



HOWMET AEROSPACE

# 90° Offset Lever Tools

300 in-lbs

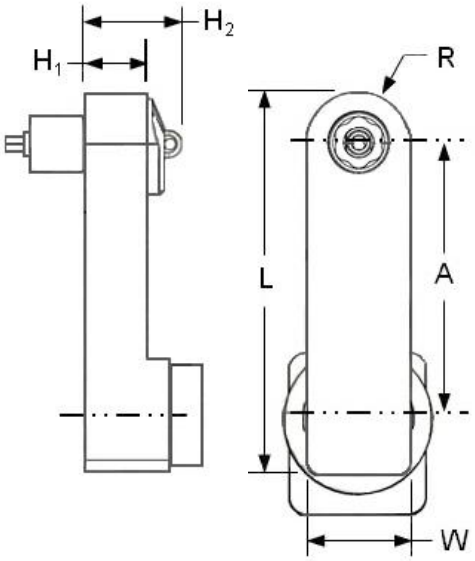

Ref: LTV28N28-10

RPM at Socket: 270

| Model Number | No. of Gears | A | $H_1$ | $H_2$ | L | R | W |
|---|---|---|---|---|---|---|---|
| **CTL5472A** | 5 | 3.0" [76.2mm] | .69" [17.5mm] | 1.0" [25.4mm] | 4.19" [106.4mm] | .56" [14.2mm] | 1.12" [28.4mm] |

This is a very durable tool design for general purpose applications and is designed for Use in a flush condition or with extended sockets and hex keys when required. This gear head has 360° indexing capability.

**Table 1**
Frangible Collar
Hex Size (Across Flats)

| Code | Hex Size |
|---|---|
| 375 | 3/8" |
| 437 | 7/16" |
| 500 | 1/2" |
| 562 | 9/16" |
| 625 | 5/8" |
| 687 | 11/16" |

.687 Max A/F Flush Socket Gear

**Table 2**
Ext'd.Socket Length

| Code | Extension |
|---|---|
| A | Flush |
| E | 5/8" |
| G | 1.0" |
| J | 2.0" |

**Table 3**
Key Hex Size

| Code | Size |
|---|---|
| 000 | NA |
| 125T | 1/8" |
| 156T | 5/32" |
| 187T | 3/16" |
| 219T | 7/32" |
| 250T | 1/4" |

Example of Complete Tool Model Number:

CTL5472A 437 E 156T

- 156T — Hex Key Size (Table 3)
- E — Extended Socket Length (Table 2)
- 437 — Fastener Hex Size (Table 1)
- CTL5472A — Tool Model Number



HOWMET AEROSPACE

# 90° Offset Lever Tools

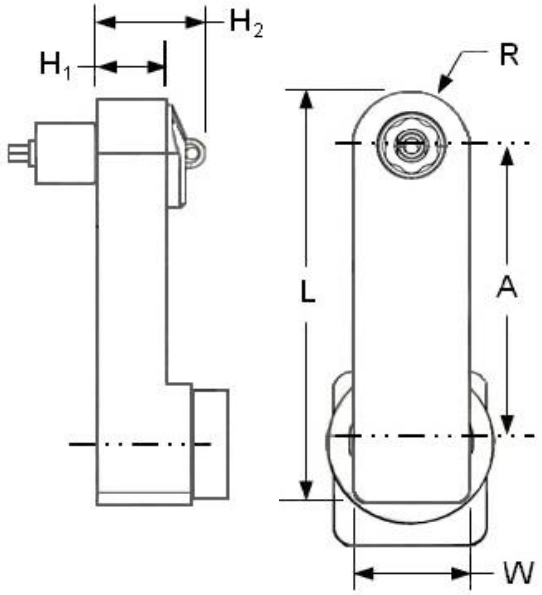


520 in-lbs

Ref: LTV38N68-13

RPM at Socket: 270

| Model Number | No. of Gears | A | $H_1$ | $H_2$ | L | R | W |
|---|---|---|---|---|---|---|---|
| **CT5472A** | 5 | 3.0" [76.2mm] | .69" [17.5mm] | 1.0" [25.4mm] | 4.19" [106.4mm] | .56" [14.2mm] | 1.12" [28.4mm] |

This is a very durable tool design for general purpose applications and is designed for Use in a flush condition or with extended sockets and hex keys when required.

This gear head has 360° indexing capability.

**Table 1**
Frangible Collar
Hex Size (Across Flats)

| Code | Hex Size |
|---|---|
| 375 | 3/8" |
| 437 | 7/16" |
| 500 | 1/2" |
| 562 | 9/16" |
| 625 | 5/8" |
| 687 | 11/16" |

**Table 2**
Ext'd.Socket Length

| Code | Extension |
|---|---|
| A | Flush |
| E | 5/8" |
| G | 1.0" |
| J | 2.0" |

**Table 3**
Key Hex Size

| Code | Size |
|---|---|
| 000 | NA |
| 125T | 1/8" |
| 156T | 5/32" |
| 187T | 3/16" |
| 219T | 7/32" |
| 250T | 1/4" |

.687 Max A/F Flush Socket Gear

Example of Complete Tool Model Number:

CT5472A 437 E 156T

- 156T — Hex Key Size (Table 3)
- E — Extended Socket Length (Table 2)
- 437 — Fastener Hex Size (Table 1)
- CT5472A — Tool Model Number



HOWMET AEROSPACE

# 90° Offset Lever Tools

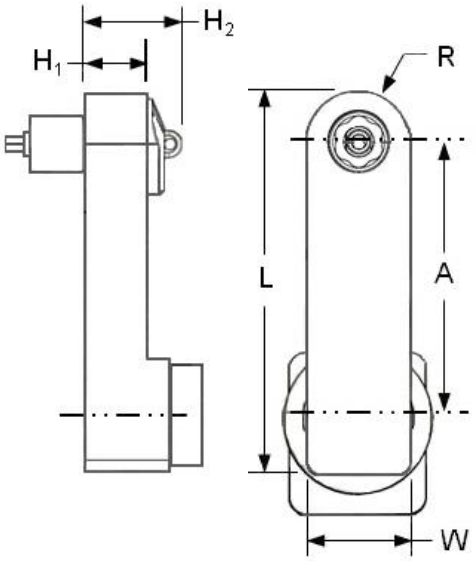


450 in-lbs

Ref: LTV38N68-13

RPM at Socket: 290

| Model Number | No. of Gears | A | $H_1$ | $H_2$ | L | W | R |
|---|---|---|---|---|---|---|---|
| **CT5720A** | 7 | 3.69" [93.6mm] | .69" [17.5mm] | 1.0" [25.4mm] | 4.88" [124.0mm] | 1.12" [28.4mm] | .56" [14.2mm] |

This is a very durable tool design for general purpose applications and is designed for Use in a flush condition or with extended sockets and hex keys when required. This gear head has 360° indexing capability.

**Table 1**
Frangible Collar
Hex Size (Across Flats)

| Code | Hex Size |
|---|---|
| 437 | 7/16" |
| 500 | 1/2" |
| 562 | 9/16" |
| 625 | 5/8" |

**Table 2**
Ext'd.Socket Length

| Code | Extension |
|---|---|
| A | Flush |
| E | 5/8" |
| G | 1.0" |
| J | 2.0" |

**Table 3**
Key Hex Size

| **Code** | **Size** |
|---|---|
| 000 | NA |
| 156T | 5/32" |
| 187T | 3/16" |

.625 Max A/F Flush Socket Gear

Example of Complete Tool Model Number:

CT5720A 500 A 156T

- 156T — Hex Key Size (Table 3)
- A — Extended Socket Length (Table 2)
- 500 — Fastener Hex Size (Table 1)
- CT5720A — Tool Model Number



HOWMET AEROSPACE

# 90° Offset Lever Tools

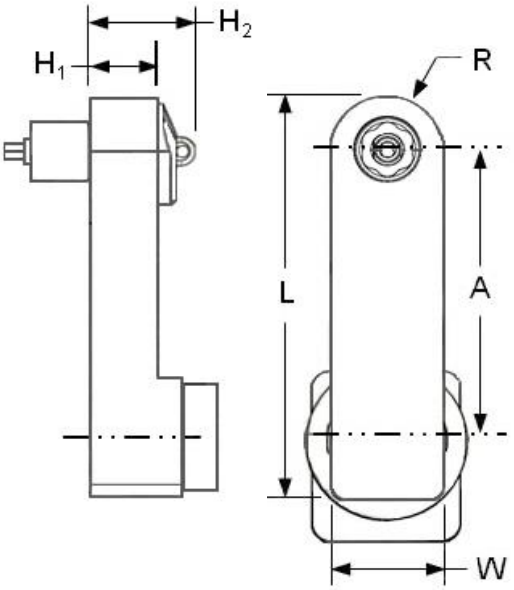


600 in-lbs

LTV38N68 Atlas Motor Required

RPM at Socket: 240

| Model Number | No. of Gears | A | $H_1$ | $H_2$ | L | W | R |
|---|---|---|---|---|---|---|---|
| **CT5463A** | 5 | 3.19" [81.0mm] | .69" [17.6mm] | 1.0" [26.3mm] | 4.44" [112.8mm] | 1.37" [34.9mm] | .68" [17.3mm] |

This is a very durable tool design for general purpose applications and is designed for use in a flush condition or with extended sockets and hex keys when required.

This gear head has 360° indexing capability.

**Table 1**
Frangible Collar
Hex Size (Across Flats)

| Code | Hex Size |
|---|---|
| 437 | 7/16" |
| 500 | 1/2" |
| 562 | 9/16" |
| 625 | 5/8" |
| 687 | 11/16" |
| 750 | 3/4" |

.687 Max A/F Flush Socket Gear

**Table 2**
Ext'd.Socket Length

| Code | Extension |
|---|---|
| A | Flush |
| E | 5/8" |
| G | 1.0" |
| J | 2.0" |

**Table 3**
Key Hex Size

| **Code** | **Size** |
|---|---|
| 000 | NA |
| 125T | 1/8" |
| 156T | 5/32" |
| 187T | 3/16" |
| 219T | 7/32" |
| 250T | 1/4" |

Example of Complete Tool Model Number:

CT5463A 750 G 187T

- 187T — Hex Key Size (Table 3)
- G — Extended Socket Length (Table 2)
- 750 — Fastener Hex Size (Table 1)
- CT5463A — Tool Model Number



HOWMET AEROSPACE

# 90° Offset Lever Tools

Torque Max: 840 in-lbs

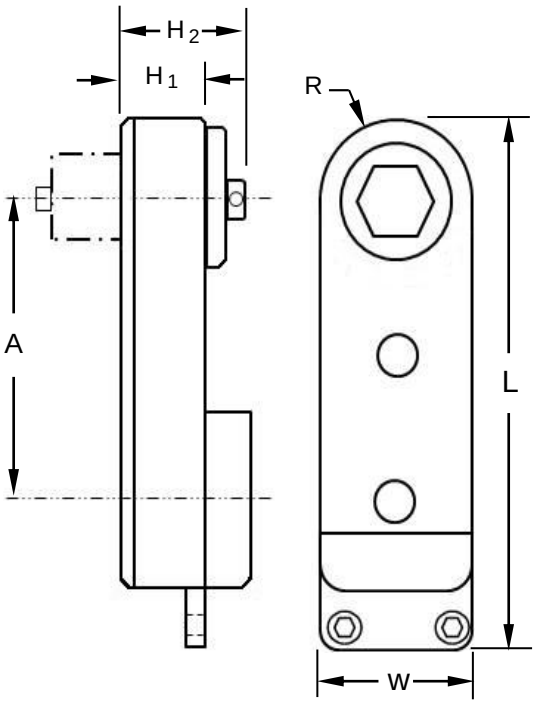

Pictured Tool is a Simulation of actual tool model

| Model Number | No. of Gears | A | $H_1$ | $H_2$ | L | W | R |
|---|---|---|---|---|---|---|---|
| **CT5605** | 3 | 2.18" [55.25mm] | .77" [19.5mm] | 1.12" [28.4mm] | 4.55" [115.57mm] | 1.38" [35.1mm] | .69" [17.5mm] |

**Table 1**

Frangible Collar Hex Size (Across Flats)

| Code | Hex Size |
|---|---|
| 562 | 9/16" |
| 625 | 5/8" |
| 687 | 11/16" |
| 750 | 3/4" |
| 875 | 7/8" |

**Table 2**

Ext'd.Socket Length

| Code | Extension |
|---|---|
| A | Flush |
| E | 5/8" |
| G | 1.0" |
| H | 1.5" |
| J | 2.0" |

**Table 3**

Key Hex Size

| **Code** | **Size** |
|---|---|
| 000 | NA |
| 156T | 5/32" |
| 187T | 3/16" |
| 219T | 7/32" |
| 250T | 1/4" |

.626 Max A/F Flush Socket Gear

Example of Complete Tool Model Number:

CT(D)5605A 625 A 187T

- 187T — Aster™ Key Size (Table 3)
- A — Extended Socket Length (Table 2)
- 625 — Fastener Hex Size (Table 1)
- CT(D)5605A — Tool Model Number



HOWMET AEROSPACE

# 90° Offset Lever Tools

Torque Max: 1290 in-lbs

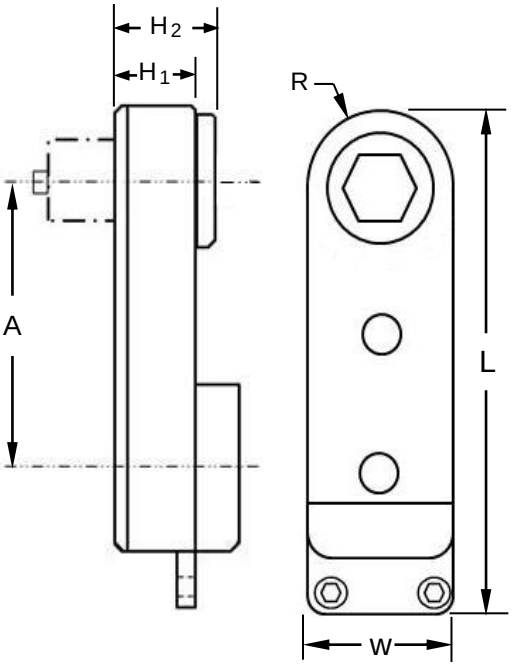


Pictured Tool is a Simulation of actual tool model

Head Only

| Model Number | No. of Gears | A | $H_1$ | $H_2$ | L | W | R |
|---|---|---|---|---|---|---|---|
| **CT5723B** | 3 | 2.88" [73.2mm] | 1.0" [25.4mm] | 1.18" [29.9mm] | 4.85" [123.2mm] | 1.80" [45.7mm] | .90" [22.8mm] |

**Table 1**
Frangible Collar
Hex Size (Across Flats)

| Code | Hex Size |
|---|---|
| 750 | 3/4" |
| 875 | 7/8" |
| 937 | 15/16" |

**Table 2**
Ext'd.Socket Length

| Code | Extension |
|---|---|
| A | Flush |
| E | 5/8" |
| G | 1.0" |
| H | 1.5" |
| J | 2.0" |

**Table 3**
Key Hex Size

| Code | Size |
|---|---|
| 000 | NA |
| 219T | 7/32" |
| 250T | 1/4" |

.626 Max A/F Flush Socket Gear

Example of Complete Tool Model Number:

CT5723B 750 F 219T

- 219T — Hex or Aster™ Key Size (Table 3a or 3b)
- F — Extended Socket Length (Table 2)
- 750 — Fastener Hex Size (Table 1)
- CT5723B — Tool Model Number



HOWMET AEROSPACE

# 90° Right Angle Power Tools

## SECTION 4

# 90º Angle Head Tools

Max Torque 220 in-lbs

RPM at Socket: 275

| Model Number | L | H | Center to Side Angle Head | Weight |
|---|---|---|---|---|
| CT310AA | 9.6" [243mm] | 1.5" [36.6mm] | 0.53" [13.5mm] | 1.9 lbs [0.88 kg] |

**Table 1**
Frangible Collar
Hex Size (Across Flats)

| Code | Hex Size |
|---|---|
| 219 | 7/32" |
| 250 | 1/4" |
| 282 | 9/32" |
| 312 | 5/16" |
| 343 | 11/32" |
| 375 | 3/8" |
| 437 | 7/16" |

**Table 2**
Ext'd.Socket Length

| Code | Extension |
|---|---|
| F | 0.750" |
| G | 1.0" |
| J | 2.0" |
| L | 3.0" |

**Table 3**
Key Hex Size

| Code | Size |
|---|---|
| 062T | 1/16" Hex Key |
| 078T | 5/64" Hex Key |
| 094T | 3/32" Hex Key |

Example of Complete Tool Model Number:

CT310AA 312 J 078T

- 078T — Hex Key Size (Table 3)
- J — Extended Socket Length (Table 2)
- 312 — Fastener Hex Size (Table 1)
- CT310AA — Tool Model Number



HOWMET AEROSPACE

# 90º Angle Head Tools

Table 1

| Tool Model Number | Max Torque (in-lbs) | Max Torque Nm | RPM | Hex Socket Sizes (A/F) | | | | | | | | Hex Key Sizes | | |
|---|---|---|---|---|---|---|---|---|---|---|---|---|---|---|
| CT310AA | 220 | 15 | 275 | 7/32 | 1/4 | 9/32 | 5/16 | 11/32 | | | | .062 | .078 | .094 |
| CT310BC | 265 | 30 | 400 | 5/16 | 11/32 | 7/16 | 1/2 | 9/16 | | | | .094 | .125 | .156 |
| CT310BF | 492 | 56 | 460 | 7/16 | 1/2 | 9/16 | 5/8 | 11/16 | 3/4 | | | .125 | .156 | .187 |
| CT310BG | 612 | 70 | 350 | 7/16 | 1/2 | 9/16 | 5/8 | 11/16 | 3/4 | | | .125 | .156 | .187 |
| CT310BH | 756 | 85 | 305 | 1/2 | 9/16 | 5/8 | 11/16 | 3/4 | 7/8 | | | .156 | .187 | .219 |
| CT310BJ | 1056 | 120 | 215 | 5/8 | 11/16 | 3/4 | 7/8 | 15/16 | 1.0 | 1 1/8 | 1 1/4 | .187 | .219 | .250 |
| CT310BK | 1330 | 140 | 170 | 5/8 | 11/16 | 3/4 | 7/8 | 15/16 | 1.0 | 1 1/8 | 1 1/4 | .219 | .250 | |
| CT310BL | 1775 | 200 | 320 | 5/8 | 11/16 | 3/4 | 7/8 | 15/16 | 1.0 | 1 1/8 | 1 1/4 | .219 | .250 | |

Note: Some shorter socket lengths may not be available in all hex sizes.

Example of Complete Tool Model Number:

CT310BG 750 G 187T

- 187T — Hex Key Size (Table 1)
- G — Extended Socket Length (Table 2)
- 750 — Hex Socket Size (Table 1)
- CT310BG — Tool Model Number

**Table 2**

Ext'd.Socket Length

| Code | Extension |
|---|---|
| B | .250 " |
| D | .500 " |
| E | .625 " |
| G | 1.0" |
| J | 2.0" |
| L | 3.0" |

# 90º Angle Head Tools

## Installation Hand Tools
## and
## Hex Keys Accessories

**SECTION 5**

Howmet Fastening Systems

HOWMET AEROSPACE

# Hand Assembly Tools For Frangible Collars

## Small Roller Wrenches, 40 & 80 in-lbs

Roller Wrenches With Square Drive

| Part Number | Max Torque | Socket Drive | Hole Thru Dia. |
|---|---|---|---|
| RWB100-40 | 40 in-lbs | 1/4" | .119 |
| RWB100-80 | 80 in-lbs | 1/4" | .119 |
| RWBO100-40 | 40 in-lbs | 1/4" | .119 |
| RWBO100-80 | 80 in-lbs | 1/4" | .119 |

# Hand Assembly Tools For Frangible Collars

## Medium Roller Wrench with 3/8" Sq. Drive

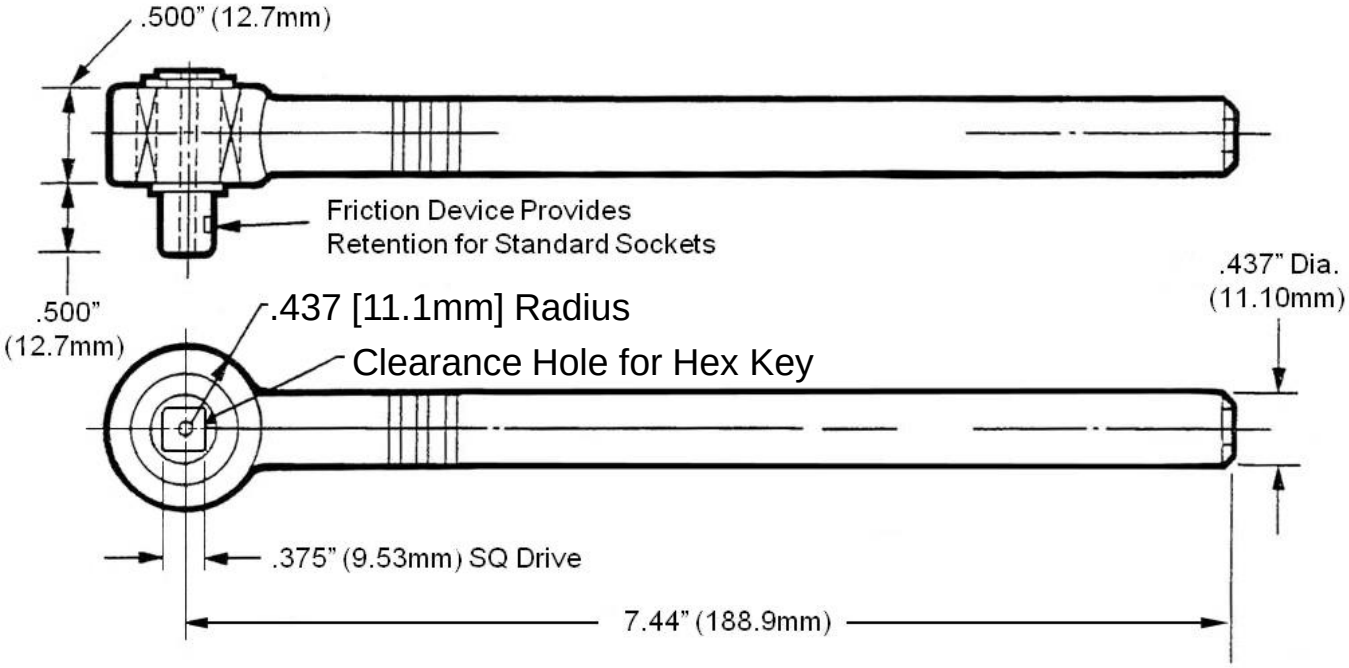


## Roller Wrench With Square Drive

| Ordering Number | Max Torque | Socket Sq. Drive | Hole Thru Dia. |
|---|---|---|---|
| RWB100-150-375 | 150 in-lbs | 3/8" | .231<br>.236 |

# Hand Assembly Tools For Frangible Collars

## Medium Roller Wrench with Integrated Sockets

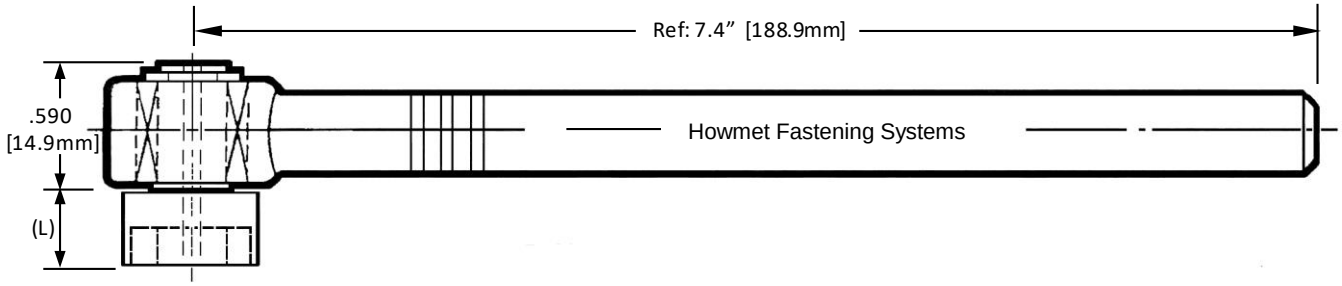


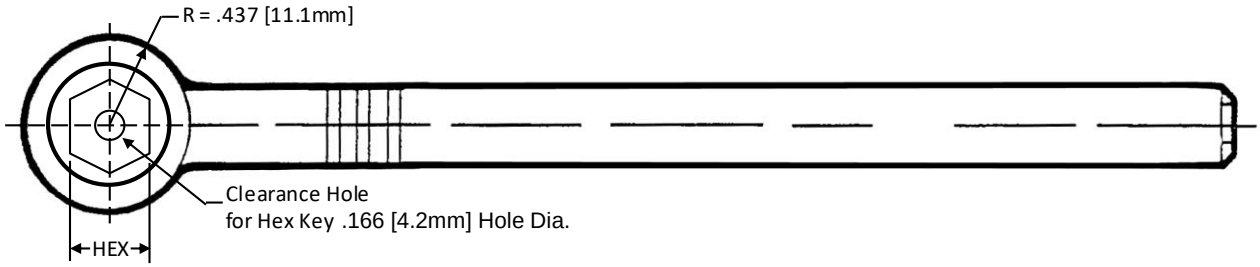


| Ordering Number | Hex Size | | L | Hole Thru Dia. |
|---|---|---|---|---|
| RWB130A-31 | .312 | 5/16" | .250 | .166 |
| RWB130A-34 | .343 | 11/32" | .270 | .166 |
| RWB130A-37 | .375 | 3/8" | .370 | .166 |
| RWB130A-43 | .437 | 7/16" | .430 | .166 |

- Designed to fit into limited access applications
- Will install frangible collars requiring 150 in-lbs [17Nm] of applied torque

# Hand Assembly Tools For Frangible Collars

## Lt. Duty Roller Wrenches with Integrated Sockets

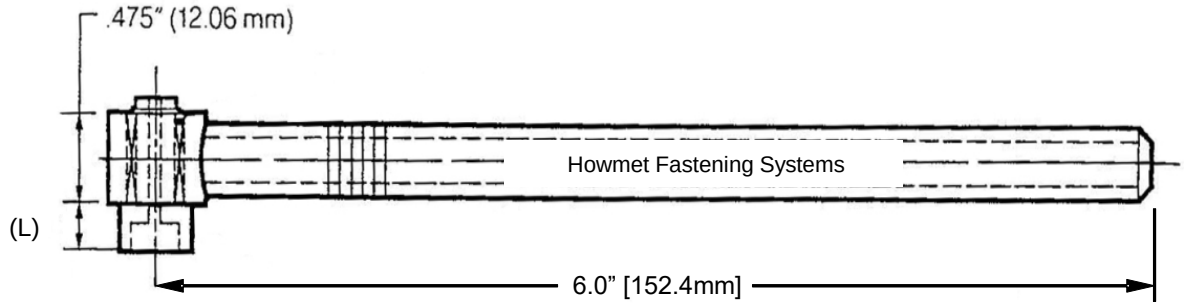


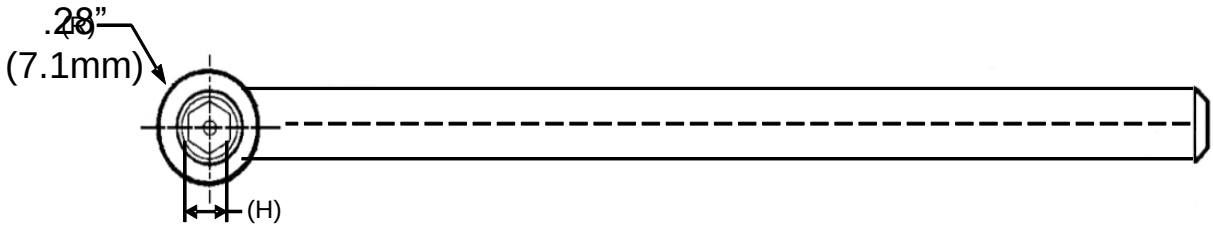


| Ordering Number | (H) Hex Size | | L | Hole Thru Dia. |
|---|---|---|---|---|
| RWB40A-21 | .219 | 7/32" | .240 | 7/32" |
| RWB40A-25 | .250 | 1/4" | .240 | 7/32" |
| RWB40A-28 | .281 | 9/32" | .240 | 7/32" |
| RWB40A-31 | .312 | 5/16" | .250 | 7/32" |
| RWB40A-34 | .343 | 11/32" | .270 | 7/32" |

- Maximum 40 in-lbs Torque Capability
- Designed to fit into limited access applications
- Do not exceed maximum torque capability of the roller wrench

# Hand Assembly Tools For Frangible Collars

## Lt. Duty Roller Wrenches with Integrated Sockets

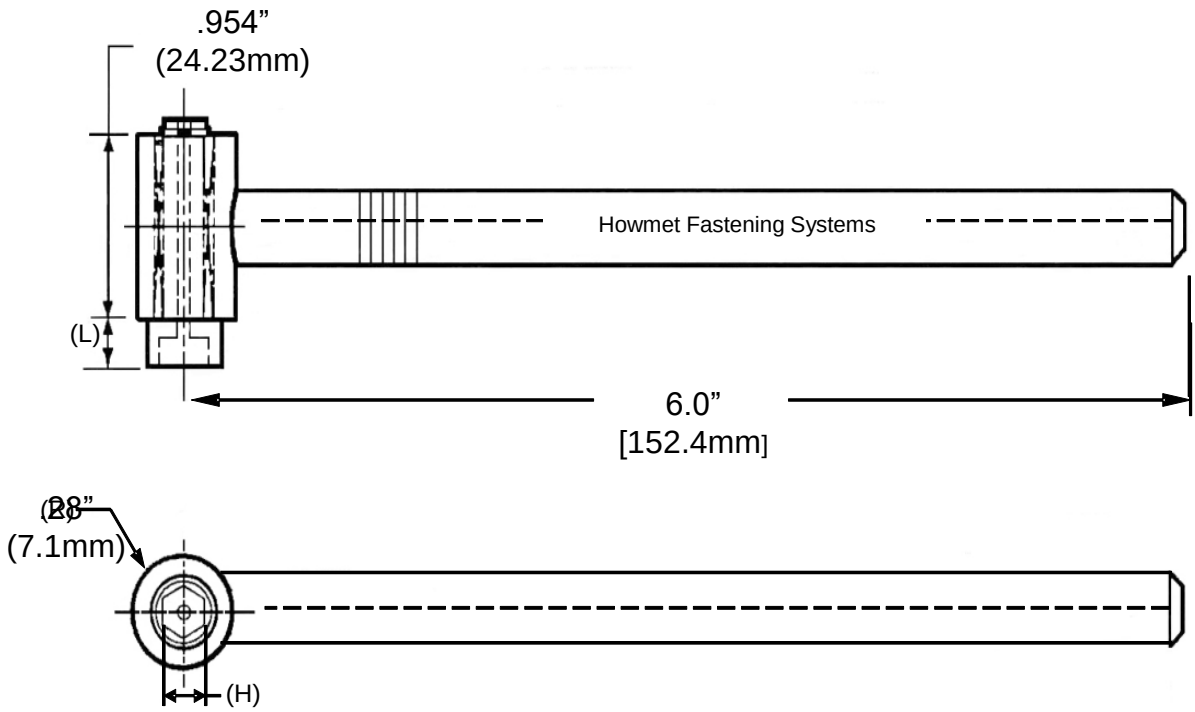


| Ordering Number | (H) Hex Size | | L | Hole Thru Dia. |
|---|---|---|---|---|
| RWB80A-21 | .219 | 7/32" | .240 | 7/32" |
| RWB80A-25 | .250 | 1/4" | .240 | 7/32" |
| RWB80A-28 | .281 | 9/32" | .240 | 7/32" |
| RWB80A-31 | .312 | 5/16" | .250 | 7/32" |
| RWB80A-34 | .343 | 11/32" | .270 | 7/32" |

- Maximum 80 in-lbs Torque Capability
- Designed to fit into limited access applications
- Do not exceed maximum torque capability of the roller wrench

# Hand Assembly Tools For Frangible Collars

## Roller Wrench, up to 400 in-lbs

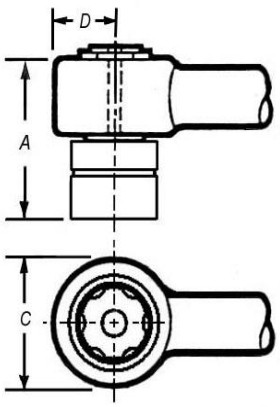


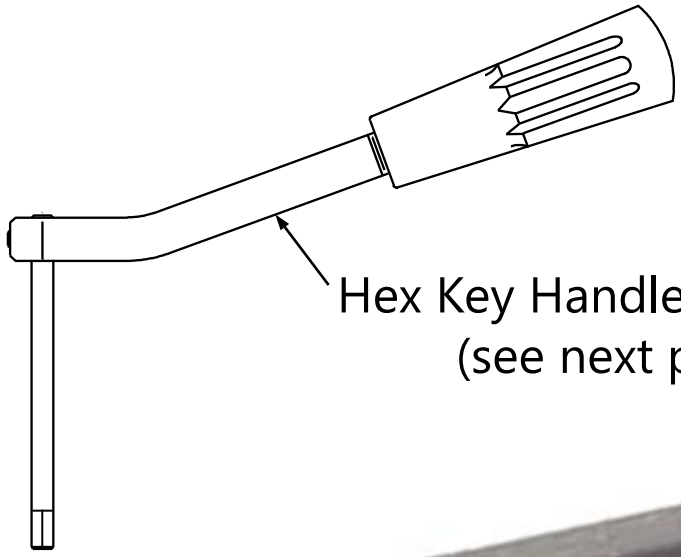

| Ordering Number | A Ref. | Handle Length Ref. | C Dia. Ref. | D Max. | Square Drive | Hole Thru Dia. |
|---|---|---|---|---|---|---|
| RWB100-400 | 2.0 | 8.0 | 1.5 | .74 | 3/8" | 1/8" |

Notes:

1. Sockets are not included with the Roller Wrench
2. Hex Key Handle Assembly sold separately

# Hand Assembly Tools For Frangible Collars

## Roller Wrench, up to 400 in-lbs

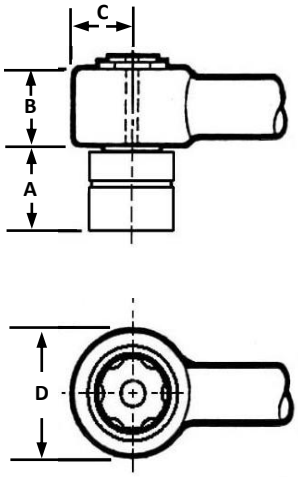


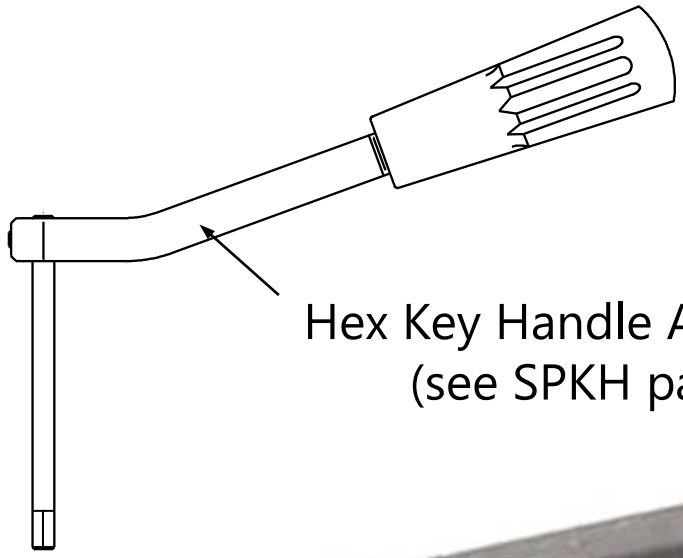

Hex Key Handle Assembly
(see SPKH page)

| Ordering Number | Hex Size | A Length Ref. | B Height Ref. | C Radius Max. | D Dia. Ref. | Handle Length Ref. | Hole Thru Dia. | Square Drive |
|---|---|---|---|---|---|---|---|---|
| RWB100-400-37 | .375 | 1.25 | .785 | .74 | 1.5 | 8.0 | 1/8" | 3/8" |
| RWB100-400-50 | .500 | 1.25 | .785 | .74 | 1.5 | 8.0 | 1/8" | 3/8" |
| RWB100-400-56 | .562 | 1.25 | .785 | .74 | 1.5 | 8.0 | 1/8" | 3/8" |

Notes:

1. Socket is included with this Roller Wrench
2. Hex Key Handle Assembly sold separately

# Hand Assembly Tools For Frangible Collars

## SPKH –Special Hex Key Handle

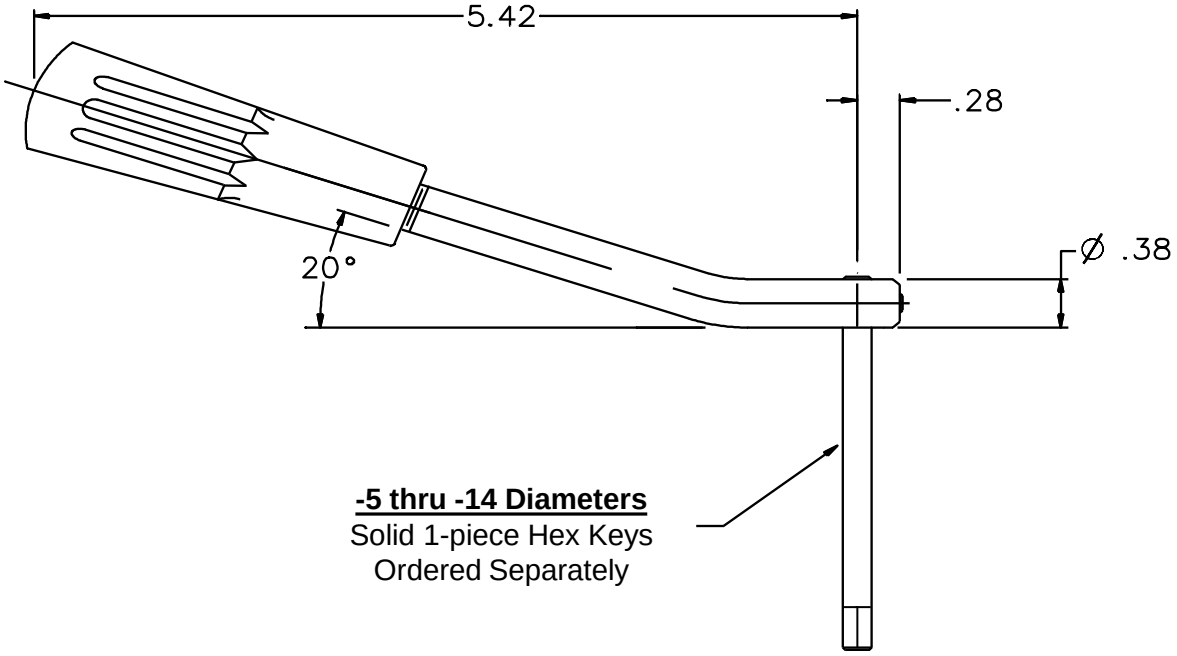


### Hex Keys

| Pin Dia. | Handle (20º) | Handle (Straight) | Hex Key Size | Hex Keys Choices | |
|---|---|---|---|---|---|
| | | | | .825 Long | 2.5" Long |
| -5 | SPKH-6 | SPKH-6S | .078 (5/64") | 093-9322 | 093-9323 |
| -6 | SPKH-6 | SPKH-6S | .078 (5/64") | 093-9322 | 093-9323 |
| -8 | SPKH-8 | SPKH-8S | .094 (3/32") | 093-9324 | 093-9325 |
| -10 | SPKH-10 | SPKH-10S | .125 (1/8") | 016-9867 | 016-9868 |
| -12 | SPKH-12 | SPKH-12S | .156 (5/32") | 016-9869 | 016-9870 |
| -14 | SPKH-14 | SPKH-14S | .187 (3/16") | 216-9008 | 216-9009 |

**How to Order:**

1. Order Handle Assembly Separately: SPKH-(*)

2. Order Hex Keys Separately

# Hand Assembly Tools For Frangible Collars

Extra Strong Hex Keys to be used for manual installation and removal of fasteners

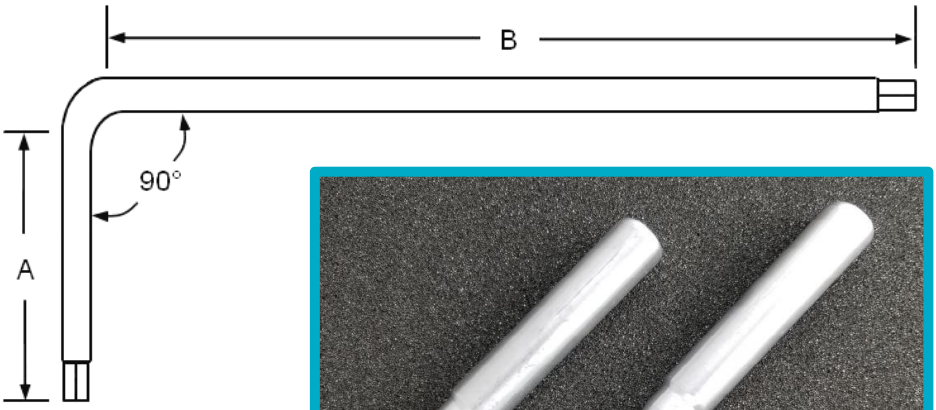


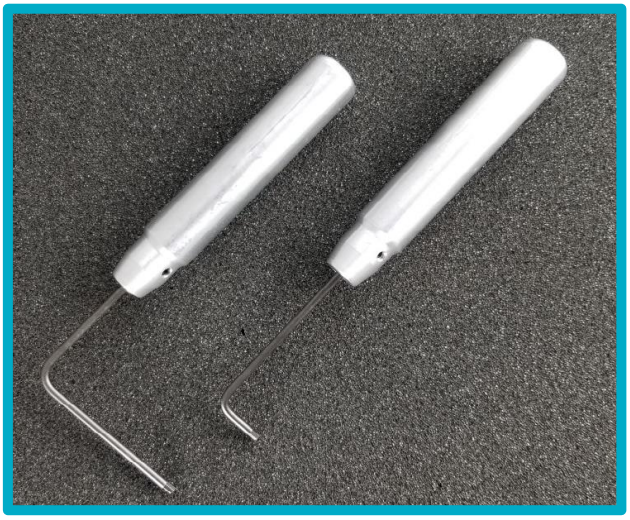

HKH105 handles are optional equipment and must be ordered separately

| Hex Key Part Number | Handle Part Number (Optional) | Screw Dia. | Hex Size | "A" Reference (inches) | "B" Reference (inches) |
|---|---|---|---|---|---|
| HK650-078-1 | HKH105-078 | -5, -6 | 5/64" (.078) | 0.50 | 3.20 |
| HK650-078-2 | HKH105-078 | -5, -6 | 5/64" (.078) | 0.75 | 3.20 |
| HK650-078-3 | HKH105-078 | -5, -6 | 5/64" (.078) | 2.09 | 4.45 |
| HK650-094-1 | HKH105-094 | -8 | 3/32" (.094) | 0.50 | 3.50 |
| HK650-094-2 | HKH105-094 | -8 | 3/32" (.094) | 0.75 | 3.25 |
| HK650-094-3 | HKH105-094 | -8 | 3/32" (.094) | 2.09 | 4.45 |
| HK650-125-4 | Not Available | -10 | 1/8" (.125) | 1.25 | 5.25 |
| HK650-125-3 | Not Available | -10 | 1/8" (.125) | 2.40 | 4.10 |
| HK650-156-3 | Not Available | -12 | 5/32" (.156) | 2.40 | 4.10 |
| HK650-156-4 | Not Available | -12 | 5/32" (.156) | 1.25 | 5.25 |

Material: High Strength Alloy Steel

Caution: Do not use these hex keys with power installation tooling

# Hand Assembly Tools For Frangible Collars

## Roller Wrenches, up to 400 in-lbs

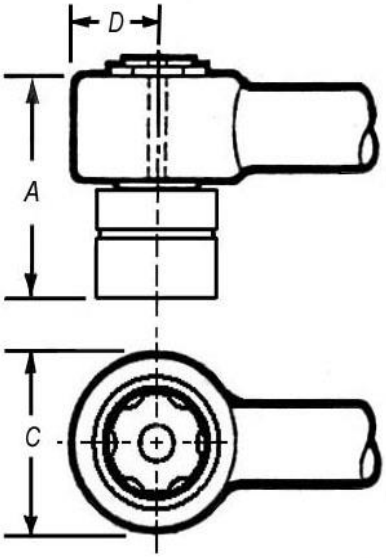


### YSA Standard Collars

YSA 351, 352, 353, 361, 362, 363

| Collar Dia. | Hex Size (mm) | Socket Part Number | Roller Wrench | Socket Drive | "A" (mm) | "C" (mm) | Socket Length | Hex Key (Metric) | Hex Key Handle, Type 1 | Hex Key Handle, Type 2 |
|---|---|---|---|---|---|---|---|---|---|---|
| -4 | 6 | CTSM-6-1 | RWB100-80 | 1/4" | 49.8 | 7.1 | 22.2mm | HK660-M1.5-1 | HKHM-1.5 | HKH100 |
| -4 | 6 | CTSM-6-2 | RWB100-80 | 1/4" | 76.8 | 7.1 | 49.2mm | HK660-M1.5-2 | HKHM-1.5 | HKH100 |
| -5 | 7 | CTSM-7-1 | RWB100-80 | 1/4" | 49.8 | 7.1 | 22.2mm | HK660-M2-1 | HKHM-2.0 | HKH100 |
| -5 | 7 | CTSM-7-2 | RWB100-80 | 1/4" | 76.8 | 7.1 | 49.2mm | HK660-M2-2 | HKHM-2.0 | HKH100 |
| -6 | 8 | CTSM-8-1 | RWB100-150-375 | 3/8" | 39.0 | 11.2 | 25.4mm | HK660-M2.5-1 | HKHM-2.5 | HKH100 |
| -6 | 8 | CTSM-8-2 | RWB100-150-375 | 3/8" | 66.0 | 11.2 | 50.8mm | HK660-M2.5-2 | HKHM-2.5 | HKH100 |
| -8 | 10 | CTSM-10-1 | RWB100-400 | 3/8" | 45.3 | 15.9 | 25.4mm | HK660-M3-1 | HKHM-3.0 | HKH100 |
| -8 | 10 | CTSM-10-2 | RWB100-400 | 3/8" | 70.7 | 15.9 | 50.8mm | HK660-M3-2 | HKHM-3.0 | HKH100 |

# Metric Hex Keys For Frangible Collars

Extra Strong Metric Keys to be used for manual installation and removal of fasteners

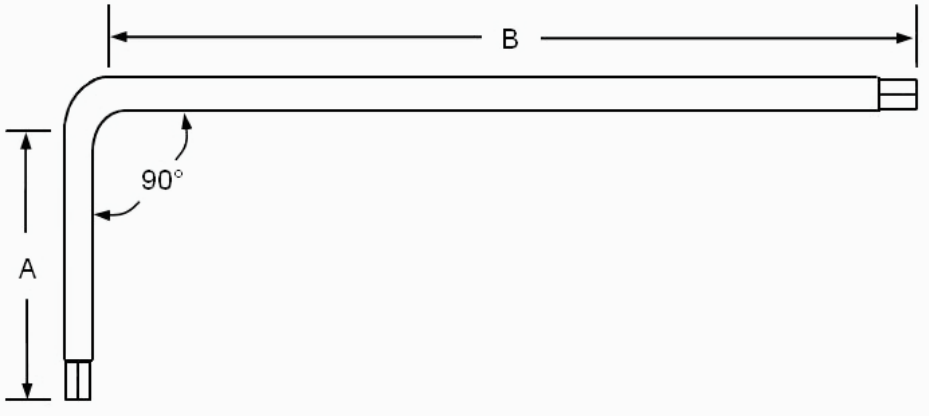


| Part Number | Bolt Dia. | Hex Size | "A" Reference | | "B" Reference | |
|---|---|---|---|---|---|---|
| | | | In | mm | In | mm |
| HK650-M1.5-1 | -4 | 1.5mm | 1.0" | 25.4 | 5.7" | 147.3 |
| HK650-M1.5-2 | -4 | 1.5mm | 2.5" | 63.5 | 4.3" | 109.2 |
| HK650-M1.5-3 | -4 | 1.5mm | 3.3" | 83.8 | 3.5" | 88.9 |
| HK650-M2-1 | -5 | 2.0mm | 1.0" | 25.4 | 5.7" | 147.3 |
| HK650-M2-2 | -5 | 2.0mm | 2.5" | 63.5 | 4.3" | 109.2 |
| HK650-M2-3 | -5 | 2.0mm | 3.3" | 83.8 | 3.5" | 88.9 |
| HK650-M2.5-1 | -6 | 2.5mm | 1.0" | 25.4 | 5.8" | 147.3 |
| HK650-M2.5-2 | -6 | 2.5mm | 2.0" | 50.8 | 4.8" | 121.9 |
| HK650-M2.5-3 | -6 | 2.5mm | 3.0" | 76.2 | 3.8" | 96.5 |
| HK650-M3-1 | -8 | 3.0mm | 1.2" | 30.5 | 5.6" | 142.0 |
| HK650-M3-2 | -8 | 3.0mm | 2.2" | 55.8 | 4.6" | 116.8 |
| HK650-M3-3 | -8 | 3.0mm | 3.2" | 81.3 | 3.6" | 91.4 |

Material: High Strength Alloy Steel

Caution: Do not use these hex keys with power installation tooling

# Handle for Forged Metric Hex Keys

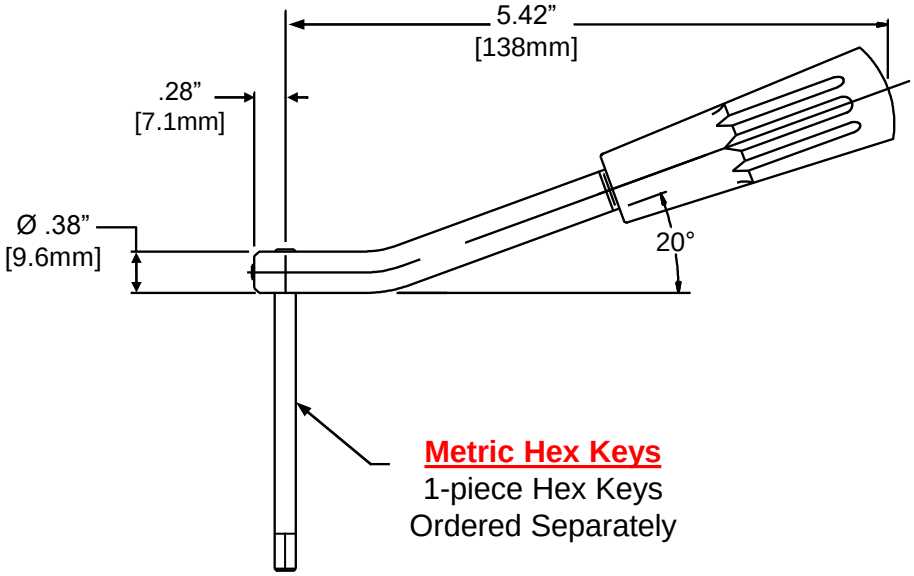


This is an economical handle for holding forged Metric Size Hex Keys. This handle is comfortable to hold and the hex keys are retained by a standard set screw. This handle and key assembly are ideal for manually installed nuts or frangible collars on pins with a metric size hex recess.

The hex keys come in a standard length of 3.0” [76.2mm] and can be shortened for tighter fit applications.

Type 1 Handle

| Handle Part Number | Hex Key Part Number | Description | Collar Dia. | Hex Key Length |
|---|---|---|---|---|
| HKHM-1.5 | HK660-M1.5-1 | Hex Key 1.5mm | -4 | 2.5" [63.5mm] |
| HKHM-1.5 | HK660-M1.5-2 | Hex Key 1.5mm | -4 | 3.3" [85.6mm] |
| HKHM-2.0 | HK660-M2-1 | Hex Key 2.0mm | -5 | 2.5" (63.5mm) |
| HKHM-2.0 | HK660-M2-2 | Hex Key 2.0mm | -5 | 3.3" [85.6mm] |
| HKHM-2.5 | HK660-M2.5-1 | Hex Key 2.5mm | -6 | 2.0" [50.8mm] |
| HKHM-2.5 | HK660-M2.5-2 | Hex Key 2.5mm | -6 | 3.0" [76.2mm] |
| HKHM-3.0 | HK660-M3-1 | Hex Key 3.0mm | -8 | 2.2" [55.9mm] |
| HKHM-3.0 | HK660-M3-2 | Hex Key 3.0mm | -8 | 3.2" [81.3mm] |

# Handle for Forged Aster™ Keys

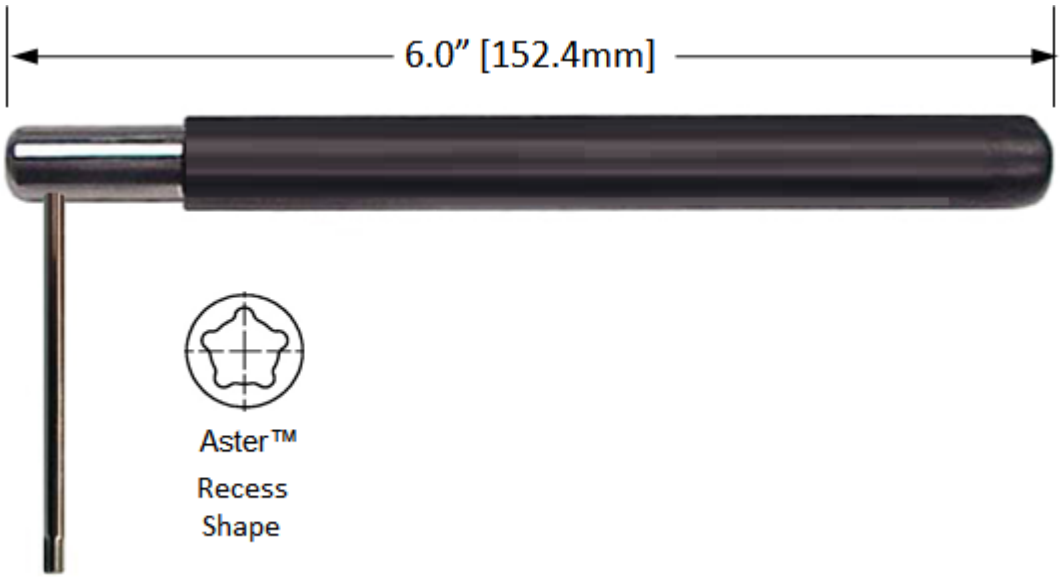


This is an economical handle for holding Aster ™ keys. This handle is comfortable to hold and the keys are retained by a standard set screw. This handle and key assembly are ideal for manually installed nuts or frangible collars on pins with the Aster ™ recess.

The keys come in a standard length of 3.0" [76.2mm] and can be shortened for tighter fit applications.

Caution: **To avoid injury, do not use this wrench design with power installation tooling**

| Ordering Numbers | Description | Aster™ Key Length |
|---|---|---|
| HKH100 | Handle | 3.0" (76.2mm) |
| AK650-2-B | Aster™ Key for -2 Dia. Pin | 3.0" (76.2mm) |
| AK650-3-B | Aster™ Key for -3 Dia. Pin | 3.0" (76.2mm) |
| AK650-3A-B | Aster™ Key for -3A Dia. Pin | 3.0" (76.2mm) |
| AK650-4-B | Aster™ Key for -4 Dia. Pin | 3.0" (76.2mm) |

Note: Aster™ is a trademark of Blanc Aero Industries

Length of the Aster™ Key can be adjusted to fit application requirements

# Aster ™ Key Accessories For Nuts and Frangible Collars

Extra Strong Aster ™ Keys to be used for manual installation and removal of fasteners

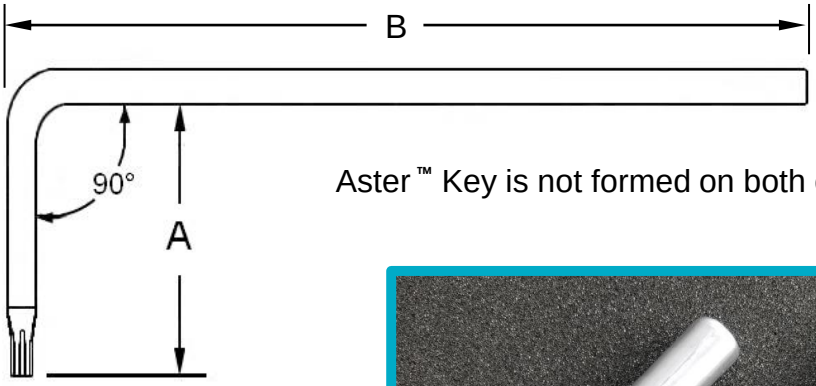


Aster ™ Key is not formed on both ends

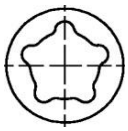

Aster ™ Recess Shape

AKH105 handles are optional equipment and must be ordered separately

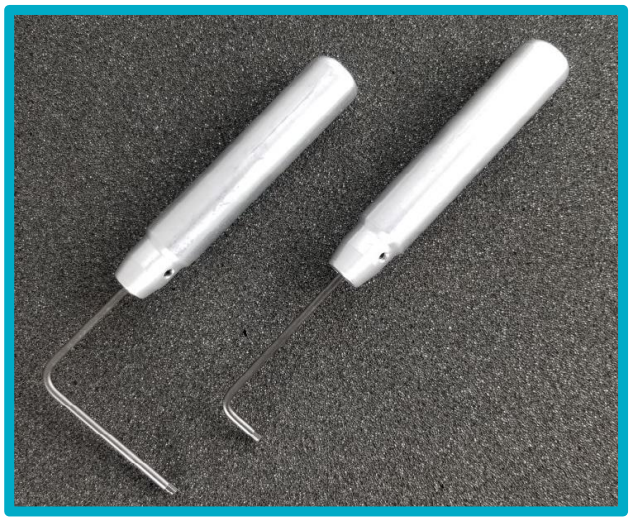

| Hex Key Part Number | Handle Part Number (Optional) | Screw Dia. | "A" Reference (mm) | "B" Reference (mm) |
|---|---|---|---|---|
| AK650-2-16 | AKH105-2 | -2 | 16.0 | 85.0 |
| AK650-3-16 | AKH105-3 | -3 | 16.0 | 85.0 |
| AK650-3A-16 | AKH105-3A | -3A | 16.0 | 85.0 |
| AK650-4-17 | AKH105-4 | -4 | 17.0 | 85.0 |

Material: High Strength Alloy Steel

Caution: Do not use this product with a power tool, serious injury can occur.

# Aster ™ Key Accessories For Nuts and Frangible Collars

Extra Strong Aster ™ Keys to be used for manual installation and removal of fasteners

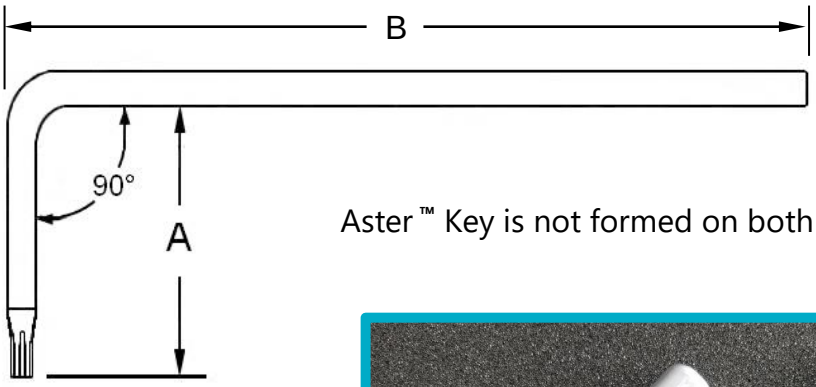


Aster ™ Key is not formed on both ends

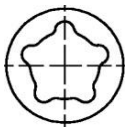

Aster ™ Recess Shape

AKH105 handles are optional equipment and must be ordered separately

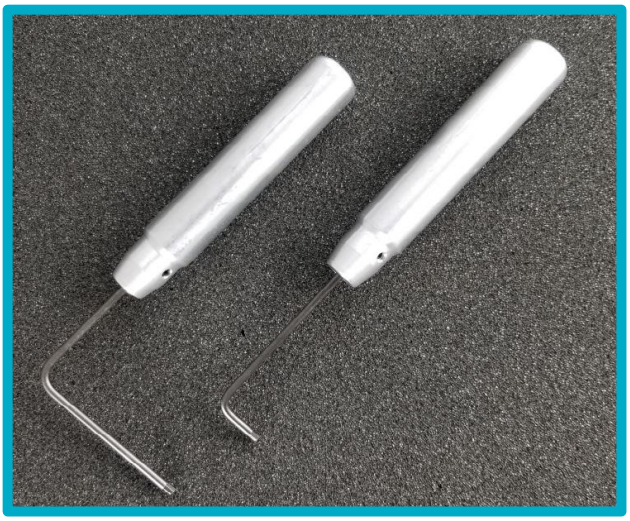

| Hex Key Part Number | Handle Part Number (Optional) | Screw Dia. | "A" Reference (mm) | "B" Reference (mm) |
|---|---|---|---|---|
| AK650-2-16 | AKH105-2 | -2 | 16.0 | 85.0 |
| AK650-3-16 | AKH105-3 | -3 | 16.0 | 85.0 |
| AK650-3A-16 | AKH105-3A | -3A | 16.0 | 85.0 |
| AK650-4-17 | AKH105-4 | -4 | 17.0 | 85.0 |

Material: High Strength Alloy Steel

Caution: Do not use this product with a power tool, serious injury can occur.

# Frangible Collars Tools

## Collar Removal Tools
## Pneumatic and Hand Tools

SECTION 6

Howmet Fastening Systems

HOWMET AEROSPACE

# Hand Removal Tool For Frangible Collars

## Crow Foot Removal Wrenches

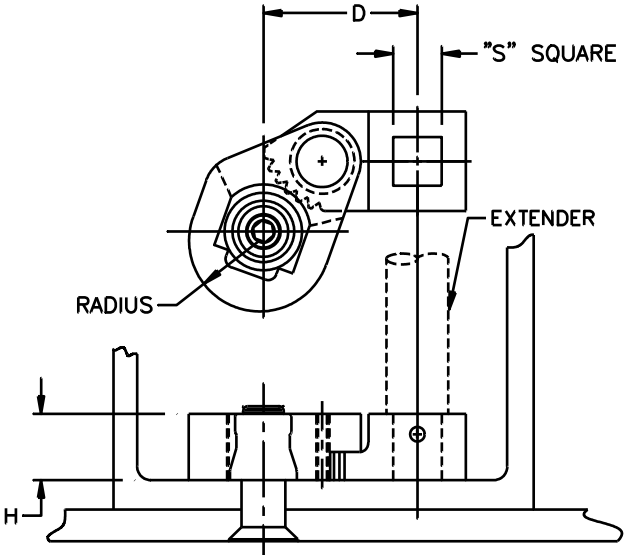


**Features:**

- **Crows foot jaw securely grips frangible collars for their easy removal in restricted areas**
- **Tool is made of heat treated high grade steel**
- **Various lengths, user provided, extenders permit tool usage in deep channels**

| Part Number | Collar Usage | Edge Radius | "S" Square | H | D |
|---|---|---|---|---|---|
| RT100-56CF | -5, -6 | .280 | .25 | 0.28 | 1.010 |
| RT100-8CF | -8 | .350 | .25 | 0.38 | 1.170 |
| RT100-10CF | -10 | .430 | .375 | 0.47 | 1.450 |
| RT100-12CF | -12 | .430 | .375 | 0.47 | 1.450 |
| FT100-14CF | -14 | .610 | .375 | 0.57 | 1.800 |

# Hand Removal Tool For Frangible Collars

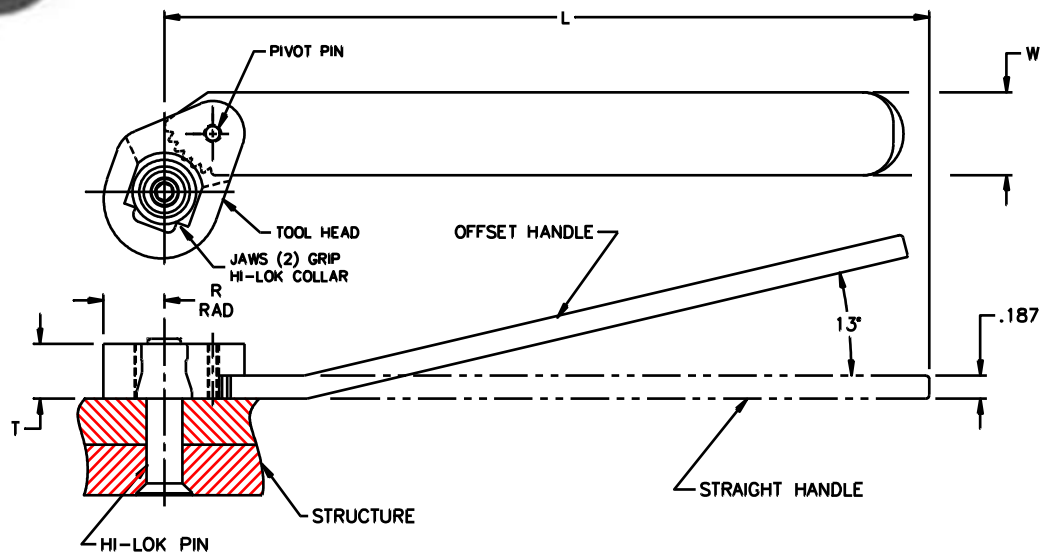


***FEATURES:***

- ***SERRATED REMOVAL TOOL SECURLY GRIPS FRANGILBLE COLLARS FOR EASY REMOVAL***
- ***TOOL IS AVAILABLE WITH AN OFFSET OR STRAIGHT HANDLE***

## *Removal Tool Offset Handle*

| Part Number | Collar Diameter | R | T | L | W |
|---|---|---|---|---|---|
| RT100-56 | -5, -6 | .280 | .28 | 5.6" | .42 |
| RT100-8 | -8 | .350 | .38 | 5.8" | .55 |
| RT100-10 | -10 | .430 | .47 | 6.9" | .67 |
| RT100-12 | -12 | .430 | .47 | 6.9" | .67 |
| RT100-14 | -14 | .610 | .57 | 9.9" | .95 |

## *Removal Tool Straight Handle*

| Part Number | Collar Diameter | R | T | L | W |
|---|---|---|---|---|---|
| RT100-56S | -5, -6 | .280 | .28 | 5.6" | .42 |
| RT100-8S | -8 | .350 | .38 | 5.8" | .55 |
| RT100-10S | -10 | .430 | .47 | 6.9" | .67 |
| RT100-12S | -12 | .430 | .47 | 6.9" | .67 |
| RT100-14S | -14 | .610 | .57 | 9.9" | .95 |

# Hand Removal Tool For Frangible Collars

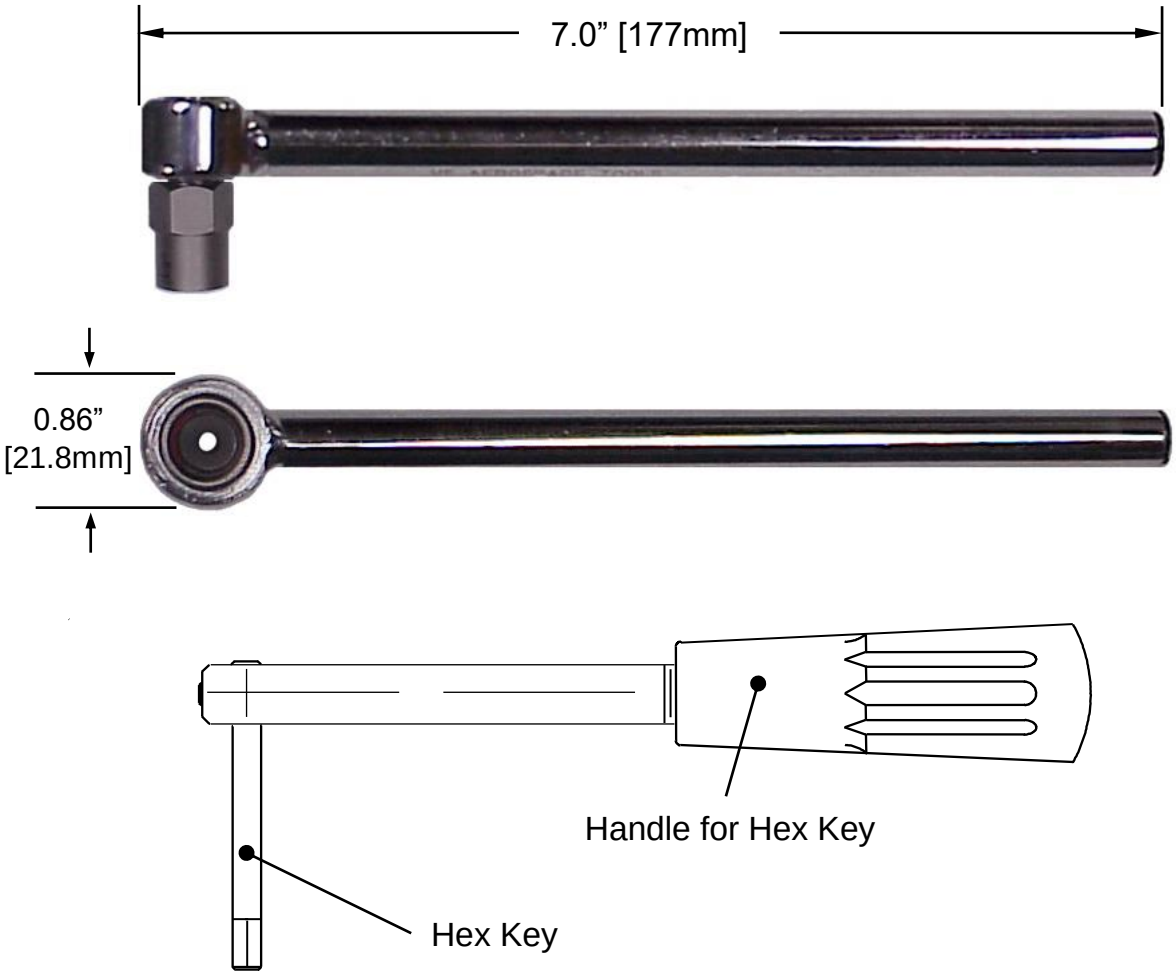


## Roller Wrench Removal Tools for Frangible Collars

| Collar Dia. | Removal Socket | Roller Wrench | Hex Key Size | Hex Key Bit 2.5" Long | Handle for Hex Key Bit |
|---|---|---|---|---|---|
| (-5) 5/32" | CRTS9000-5 | RT9001-375 | .062 (1/16") | TBD | SPKH-5S |
| (-5) 5/32" | CRTS9000-5 | RT9001-375 | .078 (5/64") | 093-9323 | SPKH-6S |
| (-6) 3/16" | CRTS9000-6 | RT9001-375 | .078 (5/64") | 093-9323 | SPKH-6S |
| (-8) 1/4" | CRTS9000-8 | RT9001-375 | .094 (3/32") | 093-9325 | SPKH-8S |

# Hand Removal Tool For Frangible Collars

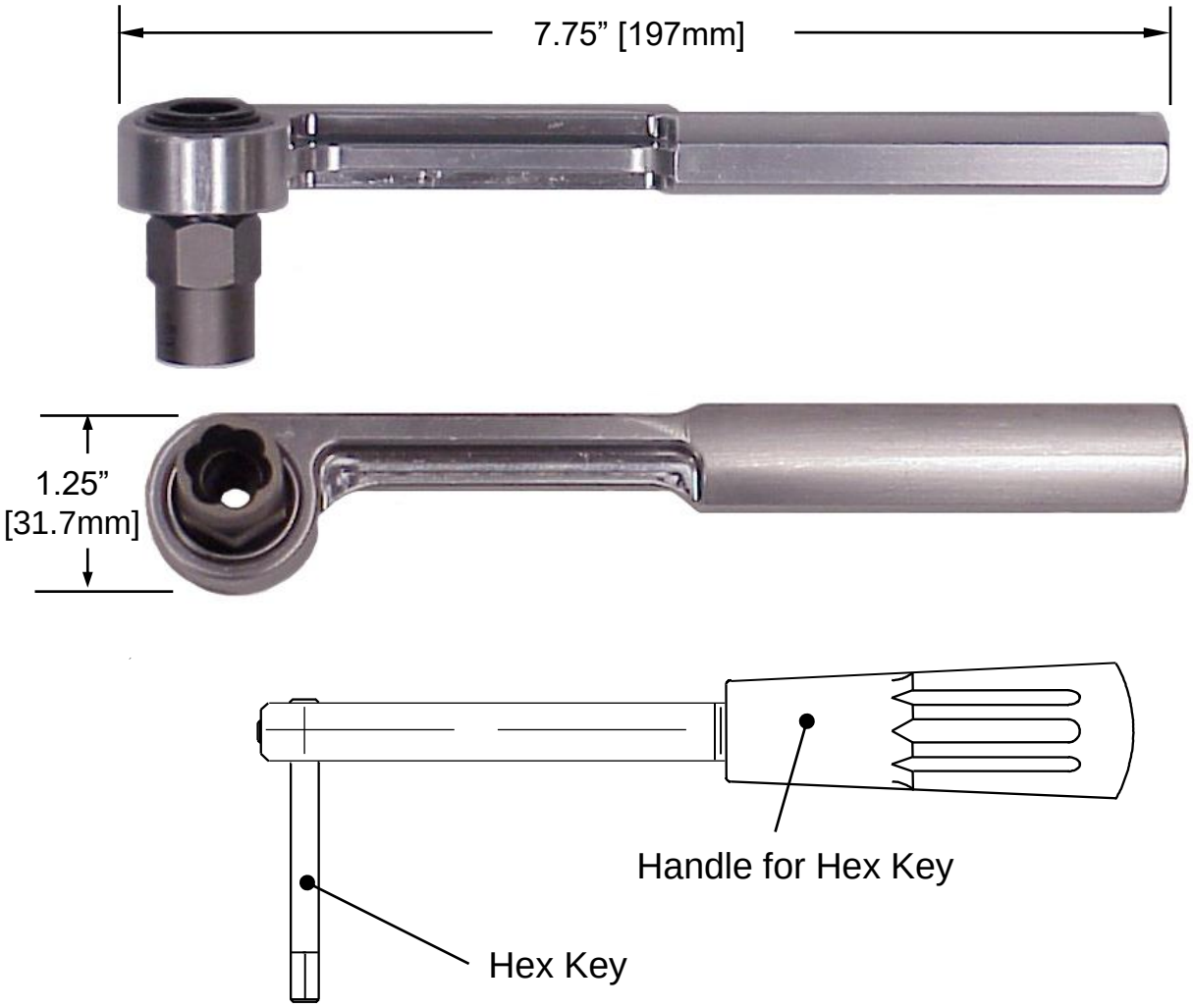


## Roller Wrench Removal Tools for Frangible Collars

| Collar Dia. | Removal Socket | Roller Wrench | Hex Key Size | Hex Key Bit 2.5" Long | Handle for Hex Key Bit |
|---|---|---|---|---|---|
| (-8) 1/4" | CRTS9000-8 | RT9000-375 | .094 (3/32") | 093-9325 | SPKH-8S |
| (-10) 5/16" | CRTS9000-10 | RT9000-375 | .125 (1/8") | 093-9008 | SPKH-10S |
| (-12) 3/8" | CRTS9000-12 | RT9000-375 | .156 (5/32") | TBD | SPKH-12S |

# Hand Removal Tool For Frangible Collars

**Procedure for removing frangible collars:**

1. Select the correct size removal socket for the fastener that will be removed.
2. Attach the appropriate size removal socket to the ratchet wrench or roller wrench.
3. Place the removal socket over the frangible collar that you want to remove and apply a moderate amount of down pressure. Turn the socket in a counter-clockwise direction to loosen the collar.
4. If the “screw” or “pin” is not tight and turns with the collar when you attempt loosen it, you will need the appropriate size hex key to hold the “pin” from turning while you rotate the nut. The hex key will fit through the ratchet wrench and socket and fit into the hex recess of the “pin”.
5. Removing the socket from the collar can be difficult. Before the collar is completely removed from the “pin” it is recommended to wiggle the socket which will detach it from the collar. You should be able to remove the collar by hand at this time.

**Howmet Fastening Systems**
**Assembly Tool Systems Division**
801 S. Placentia Avenue
Fullerton, CA USA 92831
714-278-8908 Telephone
714-871-4821 FAX

© 2020 Howmet Aerospace Inc.
Aster is a trademark of Blanc Aero Industries