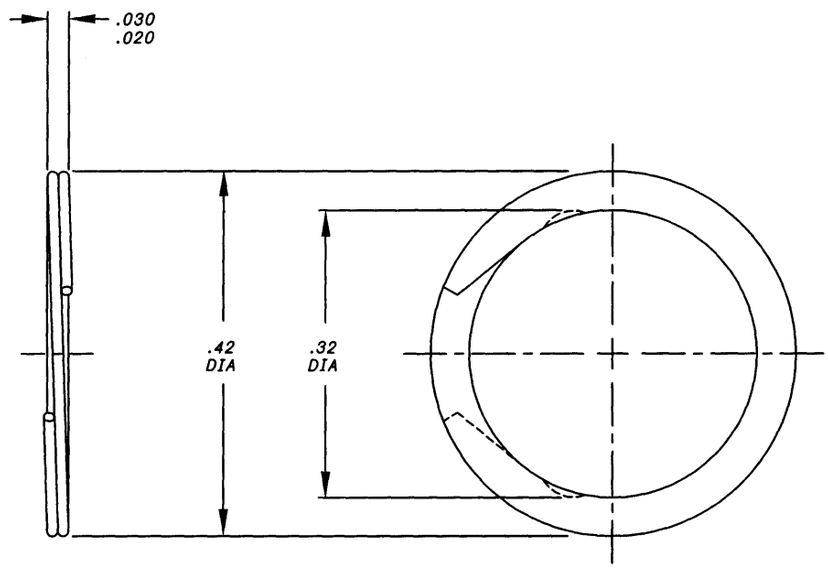

NOTES; UNLESS OTHERWISE SPECIFIED:

1. THIS RING DESIGNED FOR USE ON FX10-1500 SERIES SCREW ASSEMBLIES AND CA1797 TYPE STUD NUTS.
2. INSTALLATION TOOL:
   A.) USE FX10-1530T TO INSTALL RINGS ON FX10-1500 SERIES SCREW ASSEMBLYS.
   B.) USE CA1797-T10 TO INSTALL RINGS ON CA1795-( ) AND CA17036-( ) STUD NUTS.
3. PANEL PREPARATION DATA:
   A.) RETAINING RING RECESS: C'BORE .531 DIAMETER x .030-.035 DEEP.
   B.) MAXIMUM SUBSTRUCTURE HOLE: .390 DIAMETER.
4. MATERIAL: 18-8 TYPE 300 SERIES CRES, PER AMS5866 OR MIL-S-5059 AND/OR QQ-S-766 (CHEMISTRY ONLY).
5. HEAT TREAT: STRESS RELIEVE.
6. FINISH: PASSIVATED PER AMS2700 .
7. WEIGHT: .312 LBS/1000 PIECES (APPROXIMATE).

INTERIM DOCUMENT REVISION		
Rev.	Date	DAF#
U1	10/8/2018	117431

APPROVED DATE 29 MAY 93	CURRENT DESIGN ACTIVITY: ARCONIC Arconic Fastening Systems	TITLE: RETAINING RING OR FASTENER	CURRENT DESIGN ACTIVITY: CAGE CODE: 29372
REV. LETTER AND DATE ~~U 19 AUG 05~~			SALES DRAWING NO.
DAF NUMBER ~~DAF 69239~~	TRIDAIR PRODUCTS 3000 W. LOMITA BLVD. TORRANCE, CA 90505	UNLESS OTHERWISE SPECIFIED DIMENSIONS ARE IN INCHES & ASME Y14.5M TOLERANCES: ANGLES = ± 3° DECIMALS .XX = ± .02 .XXX = ± .010	FX10-1525 SHEET 1 OF 1

S42846