KAYNAR®
Division of Kaynar Technologies Inc.

PART NUMBER

F51559-(•)-(•)

TITLE: NUT - ANCHOR, 2 LUG, FLOATING, SELF-LOCKING, SPRING LOADED

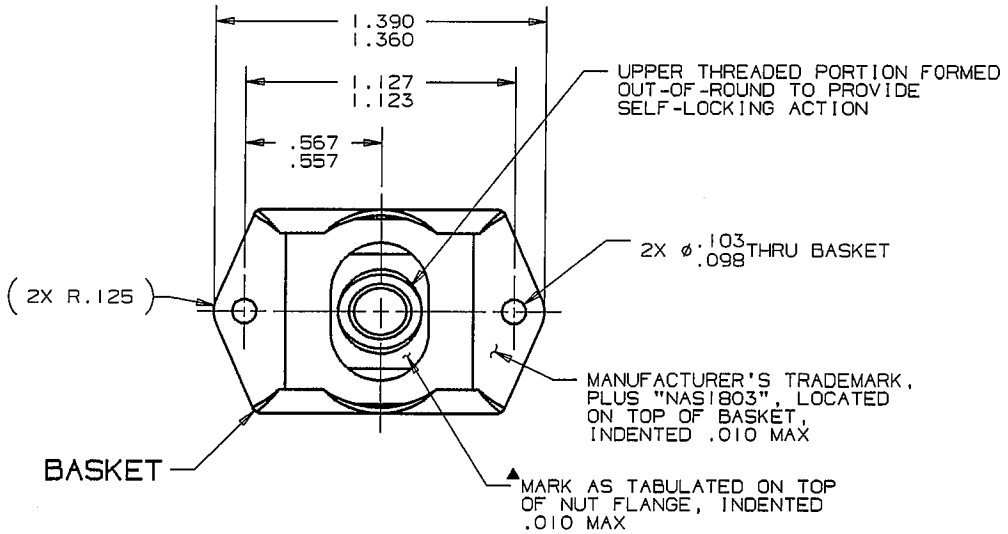

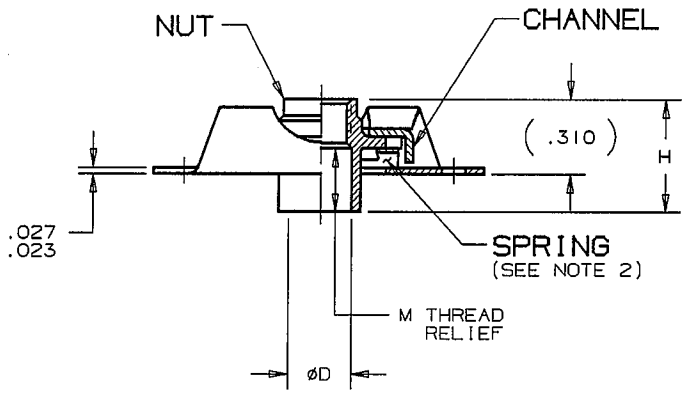

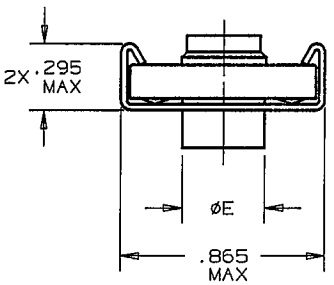

DETAIL FOR DOUBLE C'BORE PARTS
APPLIES TO F51559A3-(•) ONLY

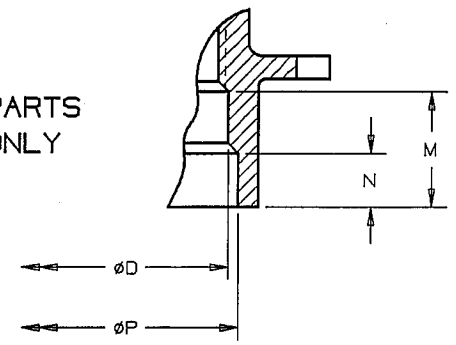

CUSTOMER PART NUMBER

NAS1803

KAYNAR®
Division of Kaynar Technologies Inc.
800 SOUTH STATE COLLEGE BLVD. - FULLERTON CALIFORNIA, 92831 TEL:(714)871-1550: FAX:(714)680-0175

VENDOR CODE IDENTIFICATION NUMBER - 15653 TOLERANCE: UNLESS OTHERWISE SPECIFIED: DECIMALS ±.015, ANGLES ±2°

REV	DRAWN/DATE	APPROVED/DATE	REVISION APPROVAL/DATE
A	RMOulambao 79/10/23	J.R. 79/10/24	KirkVW 97/08/12

PEC2994 (REDRAWN)

THIS IS A C.A.D GENERATED DRAWING

MATERIAL:

NUT -- 4130 ALLOY STEEL (UNS G41300), OR 8740 ALLOY STEEL (UNS G87400).
BASKET, CHANNEL & SPRING -- 17-7PH STAINLESS STEEL (UNS S17400).

FINISH:

F51559-3-(•), F51559A3-(•) & F51559-4-(•):
NUT -- CADMIUM PLATE PER QQ-P-416, TYPE II, CLASS 2, PLUS KAYLUBE MOLYBDENUM DISULFIDE DRY FILM LUBRICANT COAT PER MIL-L-46010.
BASKET, CHANNEL & SPRING -- PASSIVATE PER QQ-P-35 AND KAYLUBE MOLYBDENUM DISULFIDE DRY FILM LUBRICANT COAT PER MIL-L-46010.
F51559-3-(•)C, F51559A3-(•)C, F51559-4-(•)C:
NUT, BASKET & CHANNEL -- CADMIUM PLATE PER QQ-P-416, TYPE II, CLASS 2, PLUS KAYLUBE MOLYBDENUM DISULFIDE DRY FILM LUBRICANT COAT PER MIL-L-46010.
SPRING -- PASSIVATE PER QQ-P-35 AND KAYLUBE MOLYBDENUM DISULFIDE DRY FILM LUBRICANT COAT PER MIL-L-46010.

PERFORMANCE:

MIL-N-25027, EXCEPT AS FOLLOWS:
A) TORQUE OUT NOT REQUIRED.
B) AXIAL TENSILE STRENGTH OF 700 lbf MINIMUM.

APPLICATIONS:

TEMPERATURE: 450° F.

NOTES:

1. FLOATABILITY; RADIALLY FROM CENTERED POSITION:
   F51559-3-(•) -- .150 MINIMUM.
   F51559A3-(•) -- .100 MINIMUM.
   F51559-4-(•) -- .100 MINIMUM.
2. SPRING LOAD SHALL BE 25 lbf ±3 lbf WHEN THE NUT ELEMENT SHANK PROTRUDES FROM THE BEARING SURFACE OF THE BASKET A DISTANCE EQUAL TO THE NOMINAL STRUCTURE THICKNESS. ADDITIONAL PROTRUSION OF .013 ±.007 WILL CAUSE THE NUT ELEMENT FLANGE TO BOTTOM OUT.

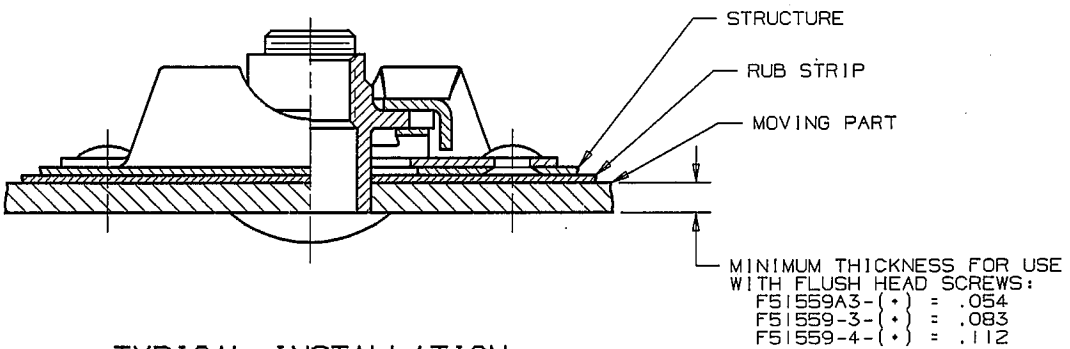

TYPICAL INSTALLATION

KAYNAR®
Division of Kaynar Technologies Inc.

PART NUMBER

F51559-(•)-(•)

TITLE: NUT - ANCHOR, 2 LUG, FLOATING, SELF-LOCKING, SPRING LOADED

KAYLOCK PART NO.		THREADS PER MIL-S-8879	STRUCTURE THICKNESS +.004 -.005	D	E	H MAX	M ±.005	STAMP ▲	APPROX WEIGHT lb/100
	-9		.035			.313	.173	1	2.05
	-0		.040			.318	.178		1.99
	-10		.045			.323	.183	2	1.99
	-11		.055			.333	.193	3	1.99
	-1		.057			.335	.195		2.01
	-2		.065			.343	.203	4	2.01
	-3		.075			.353	.213	5	2.01
	-12		.085			.363	.223	6	2.02
	-4		.088			.366	.226		2.02
	-13		.095			.373	.233	7	2.03
	-14		.105			.383	.243	8	2.03
	-15		.115			.393	.253	9	2.05
	-16		.125			.403	.263	10	2.05
	-6		.133			.411	.271		2.06
	-17		.135			.413	.273	11	2.06
	-18		.145			.423	.283	12	2.07
	-19		.155			.433	.293	13	2.07
	-20		.165			.443	.303	20	2.08
	-21		.175			.453	.313	21	2.08
	-7		.180			.458	.318		2.08
F51559-3	-22	.1900-32UNJF-3B	.185	.200 .195	.255 .250	.463	.323	22	2.09
	-23		.195			.473	.333	23	2.10
	-24		.205			.483	.343	24	2.10
	-25		.215			.493	.353	25	2.12
	-26		.225			.503	.363	26	2.12
	-27		.235			.513	.373	27	2.13
	-28		.245			.523	.383	28	2.14
	-29		.255			.533	.393	29	2.14
	-31		.275			.553	.413	31	2.15
	-32		.285			.563	.423	32	2.16
	-33		.295			.573	.433	33	2.16
	-34		.305			.583	.443	34	2.16
	-35		.315			.593	.453	35	2.17
	-36		.325			.603	.463	36	2.18
	-37		.335			.613	.473	37	2.18
	-38		.345			.623	.483	38	2.19
	-39		.355			.633	.493	39	2.19
	-40		.365			.643	.503	40	2.19
	-41		.375			.653	.513	41	2.20
	-42		.385			.663	.523	42	2.21
	-43		.395			.673	.533	43	2.21

THIS IS A C.A.D GENERATED DRAWING

KAYNAR®
Division of Kaynar Technologies Inc.

PART NUMBER

F51559-(•)-(•)

TITLE: NUT - ANCHOR, 2 LUG, FLOATING, SELF-LOCKING, SPRING LOADED

KAYLOCK PART NO.		THREADS PER MIL-S-8879	STRUCTURE THICKNESS +.004 -.005	D	E	H MAX	M ±.005	(N)	P	STAMP ▲	APPROX WEIGHT lb/100
	-9		.035			.313	.173	.048		1	2.05
	-0		.040			.318	.178	.053		0	1.99
	-10		.045			.323	.183	.058		2	1.99
	-11		.055			.333	.193	.068		3	1.99
	-1		.057			.335	.195	.063			2.01
	-2		.065			.343	.203	.078		4	2.01
	-3		.075			.353	.213	.088		5	2.01
	-12		.085			.363	.223	.098		6	2.02
	-4		.088			.366	.226	.103			2.02
	-13		.095			.373	.233	.108		7	2.03
	-14		.105			.383	.243	.118		8	2.03
	-15		.115			.393	.253	.128		9	2.05
	-16		.125			.403	.263	.138		10	2.05
	-6		.133			.411	.271	.143			2.06
	-17		.135			.413	.273	.148		11	2.06
	-18		.145			.423	.283	.158		12	2.07
	-19		.155			.433	.293	.168		13	2.07
	-20		.165			.443	.303	.178		20	2.08
	-21		.175			.453	.313	.188		21	2.08
	-7		.180			.458	.318	.193			2.08
F51559A3	-22	.1900-32UNJF-3B	.185	.200 .195	.345 .340	.463	.323	.198	.270 .265	22	2.09
	-23		.195			.473	.333	.208		23	2.10
	-24		.205			.483	.343	.218		24	2.10
	-25		.215			.493	.353	.228		25	2.12
	-26		.225			.503	.363	.238		26	2.12
	-27		.235			.513	.373	.248		27	2.13
	-28		.245			.523	.383	.258		28	2.14
	-29		.255			.533	.393	.268		29	2.14
	-31		.275			.553	.413	.288		31	2.15
	-32		.285			.563	.423	.298		32	2.16
	-33		.295			.573	.433	.308		33	2.16
	-34		.305			.583	.443	.318		34	2.16
	-35		.315			.593	.453	.328		35	2.17
	-36		.325			.603	.463	.338		36	2.18
	-37		.335			.613	.473	.348		37	2.18
	-38		.345			.623	.483	.358		38	2.19
	-39		.355			.633	.493	.368		39	2.19
	-40		.365			.643	.503	.378		40	2.19
	-41		.375			.653	.513	.388		41	2.20
	-42		.385			.663	.523	.398		42	2.21
	-43		.395			.673	.533	.408		43	2.21

THIS IS A C.A.D GENERATED DRAWING

KAYNAR®
Division of Kaynar Technologies Inc.

PART NUMBER

F51559-(•)-(•)

TITLE: NUT - ANCHOR, 2 LUG, FLOATING, SELF-LOCKING, SPRING LOADED

KAYLOCK PART NO.		THREADS PER MIL-S-8879	STRUCTURE THICKNESS +.004 -.005	D	E	H MAX	M ±.005	STAMP ▲	APPROX WEIGHT lb/100
	-09		.035			.313	.173	1	1.93
	-10		.045			.323	.183	2	2.01
	-11		.055			.333	.193	3	2.02
	-1		.057			.335	.195		2.02
	-2		.065			.343	.203	4	2.02
	-3		.075			.353	.213	5	2.03
	-12		.085			.363	.223	6	2.04
	-4		.088			.366	.226		2.05
	-13		.095			.373	.233	7	2.06
	-14		.105			.383	.243	8	2.09
	-15		.115			.393	.253	9	2.10
	-16		.125			.403	.263	10	2.11
	-17		.135			.413	.273	11	2.13
	-18		.145			.423	.283	12	2.13
	-9		.150			.428	.278		2.15
	-19		.155			.433	.293	13	2.16
	-20		.165			.443	.303	20	2.17
	-21		.175			.453	.313	21	2.18
	-22		.185			.463	.323	22	2.19
F51559-4	-23	.2500-28UNJF-3B	.195	.270 .265	.345 .340	.473	.333	23	2.22
	-24		.205			.483	.343	24	2.23
	-25		.215			.493	.353	25	2.23
	-26		.225			.503	.363	26	2.24
	-27		.235			.513	.373	27	2.25
	-28		.245			.523	.383	28	2.26
	-29		.255			.533	.393	29	2.26
	-31		.275			.553	.413	31	2.29
	-32		.285			.563	.423	32	2.29
	-33		.295			.573	.433	33	2.30
	-34		.304			.583	.443	34	2.30
	-35		.314			.593	.453	35	2.31
	-36		.324			.603	.463	36	2.32
	-37		.334			.613	.473	37	2.32
	-38		.344			.623	.483	38	2.33
	-39		.354			.633	.493	39	2.34
	-40		.264			.643	.503	40	2.35
	-41		.374			.653	.513	41	2.35
	-42		.384			.663	.523	42	2.36
	-43		.394			.673	.533	43	2.37