90° Offset Lever Tools

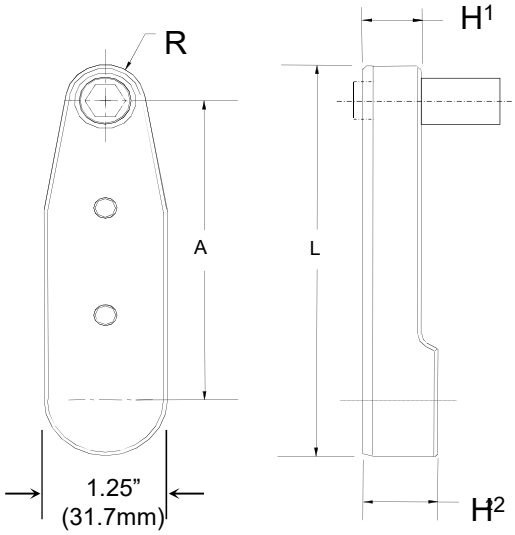

Torque: 260 in-lbs

Ref: LTV28N30 Series

Model Number	No. of Gears	A	H_1	H_2	L	R
CT5478	4	2.35 [59.6mm]	.50 [12.7mm]	.65 [16.7mm]	3.7 [92.8mm]	.437 [11.1mm]

This is a very durable tool design for general purpose applications and is designed for use in a flush condition or with extended sockets and hex keys when required.

This gear head has 360° indexing capability.

Table 1

Frangible Collar

Hex Size (Across Flats)

Code	Hex Size
375	3/8"
437	7/16"
500	1/2"
562	9/16"

Table 2

Ext'd.Socket Length

Code	Extension
A	Flush
D	0.500"
E	0.625"
F	0.750"
G	1.0"

Table 3

Key Hex Size

Code	Size
094	3/32" Hex Key
125T	1/8" Hex Key
156T	5/32" Hex Key

Example of Complete Tool Model Number:

CT5478X 437 E 125T

- 125T — Hex Key Size (Table 3)
- E — Extended Socket Length (Table 2)
- 437 — Fastener Hex Size (Table 1)
- CT5478X — Tool Model Number

HOWMET AEROSPACE