ARCONIC

Innovation, engineered.

Frangible Collar Assembly Tools

April 27, 2018

Tool Selection

How to Specify Your Tool Selection:

1. Identify the fastener type and diameter by part number.
2. Identify the installed torque range of the fastener.
3. What is the hex size of the collar? Example: 1/4″ = 250
4. Does a pistol grip tool or a straight motor fit the application best?
5. Most tools can be equipped with a 360° index unit that will help with application accessibility.
6. Would the tool fit best with an extended socket or a flush socket?
7. Are the threaded pins interference fit or loose? If they are loose a hex key would be required.
8. Don't see the tool you need? We have 100's of tool models not listed in this catalog.
9. Need Additional Help? Please call us for assistance, 714-278-8908

Example of Complete Tool Model Number:

CTL1429 C 343 D 078

- 078 — Hex Key Size (Table 3) Add "T" for 2-piece (078T)
- D — Extended Socket Length (Table 2)
- 343 — Fastener Hex Size (Table 1)
- C — Ext'd. Drive Shaft and Index Unit (Table 4)
- CTL1429 — Tool Model Number

New Tool Application Form

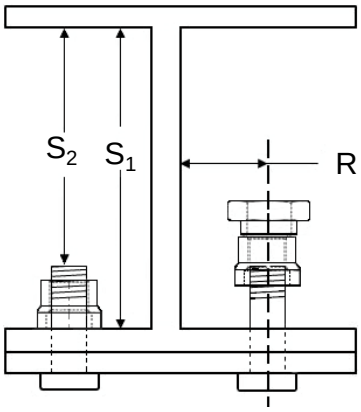

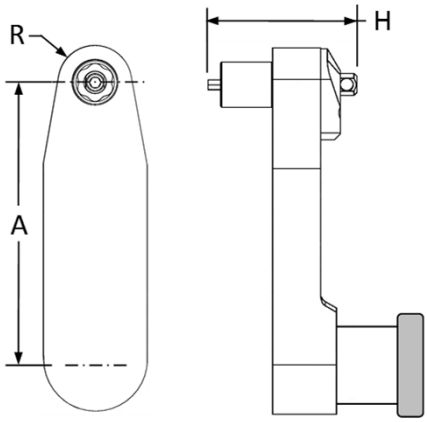

1. Nut or frangible collar part number _____
2. Hex size of the Nut or frangible collar _____ inches _____ mm
3. What is the final torque requirement of the fastener _____ in-lbs., _____ (Nm)
4. "R" Edge distance between centerline of fastener to nearest structure_____ (in) _____(mm)
5. "S_1" Total working space _____ (in), _____ (mm)
6. "S_2" Minimum clearance over Pin _____ (in) _____ (mm)
7. Will a hex key be required ? YES or NO (circle one), if yes, hex key size _____
8. "A" Offset required, Min _____ Max _____ (inch or mm)
9. Is an extended socket required? Yes or No, Length of socket __ (inch or mm)
10. "H" Maximum height of the gear head, Including socket _____ (inch or mm)

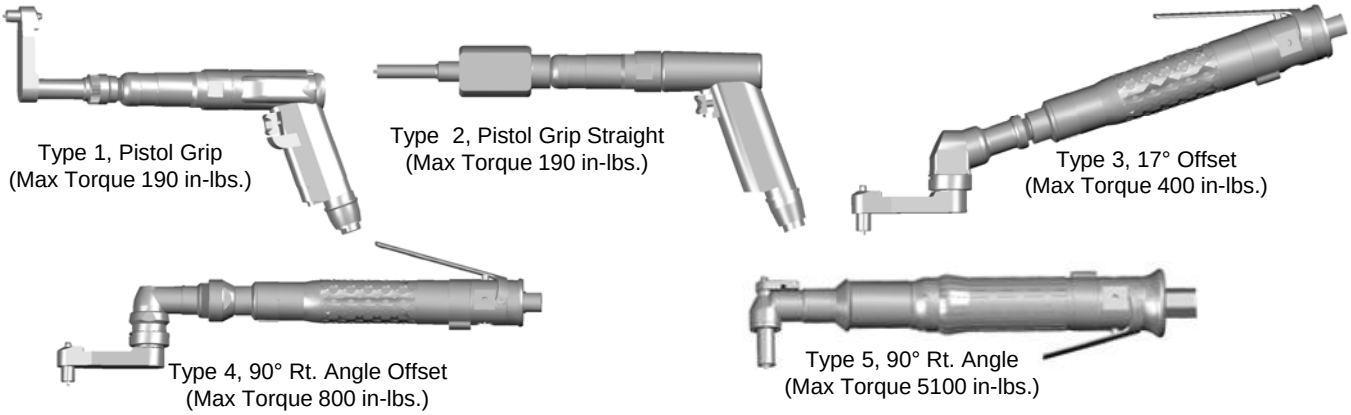

11. Determine type of tool: Type 1 ___, Type 2 ___, Type 3 ___, Type 4 ___, Type 5 ___
12. Make and model number of preferred nutrunner _____

Company Name _____

Contact _____

Phone _____ FAX _____

Return by FAX: (714) 871-4821 or E-mail glenn.anderson@Arconic.com

Form: F-11196 Rev 2

Standard & Tall Hex Frangible Collars

Standard "HL" Frangible Collar

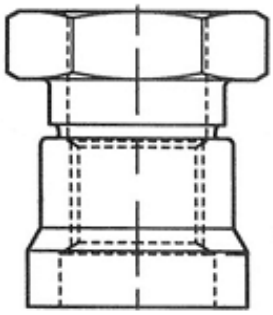

"HST" (Tall Hex) Frangible Collar

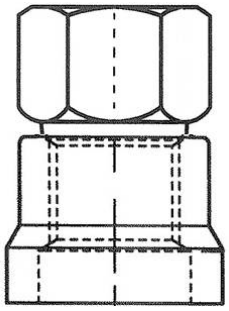

"Bi-Hex Nut" (Airbus)

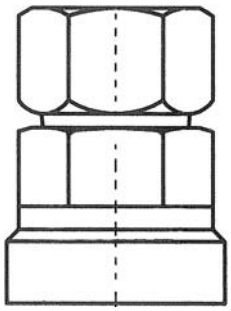

Our socket and hex key systems are designed to install all (3) types of fasteners using the same sockets and hex key systems.

Below is an example of a tool ordering number:

CTL1429C343D078
CTL3429A343D078

Bi-Hex Nuts

Example of Fastener Part Numbers:

ASNA2528-(*)
ASNA2536-(*)
ASNA2537-(*)
ASNA2538-(*)

This fastener can be installed as a "frangible collar" using non-torque controlled tools or as a nut installed with torque controlled tools in a pre-torque or final torque condition.

"Bi-Hex Nut"

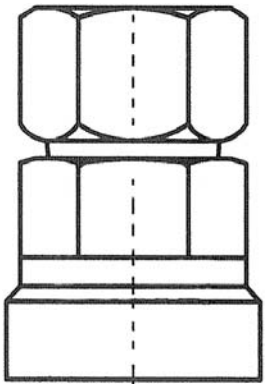

"Bi-Hex" Nuts have (2) wrenchable hex features. The top hex can be used if you are using a non-torque controlled installation tool. The top hex will "break-off" when the proper seating torque has been reached.

If "Pre-Torquing" the nut is important, tightening the nut without breaking the collar, a deep hex recess socket can be used with a *torque controlled tool*. The socket reaches over both hex features and the top hex is not removed. This requires a secondary operation to break off the top hex after a period of time.

Note: "CTL" Frangible collar tool for final installation
"KTLP" indicates a pre-torque tool

ERGO KEY™ System for Improved Performance & Safety

This unique hex key design keeps it from turning and twisting the return spring during the fastener installation cycle. It also eliminates torsional friction that can build up during installation cycle improving the spring durability and making it easier to remove the tool and move to the next fastener.

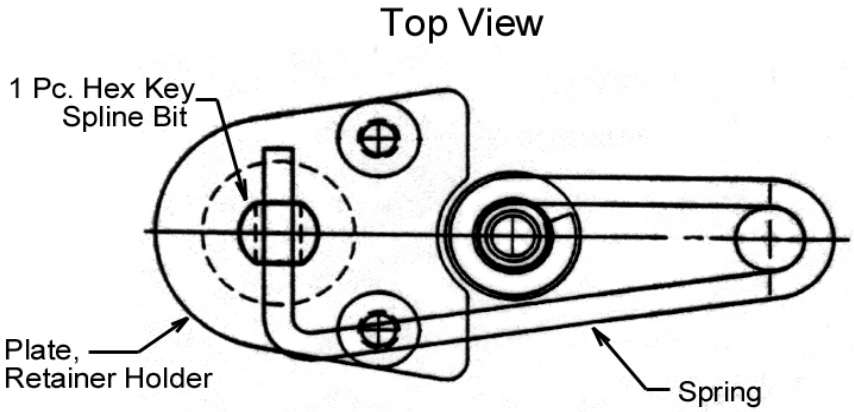

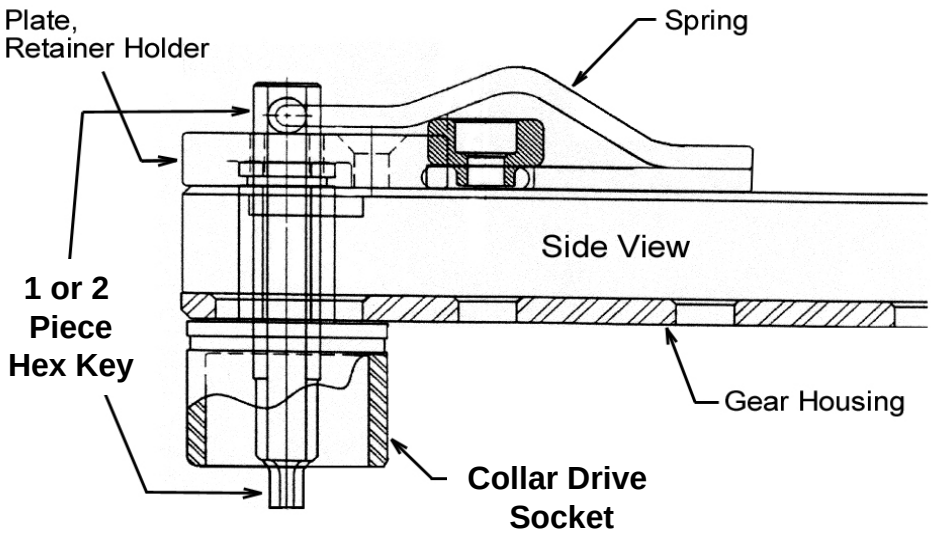

High Strength Hex Key System

The purpose of the hex key is to hold the screw or bolt (pin) from turning while the nut is being installed, this is particularly important in non-interference fit holes. It works as a “hold & drive” from the nut side of the application and is affixed to the back of the attached gear housing.

Improved Strength, Solid 1-Piece Hex Key

Solid 1-Pc Hex Key →

1-Piece Hex Key

- Very strong-forged Hex Key
- Available in socket lengths up to 3.0” (76.2mm)
- Hex Keys last longer
- Less downtime
- Improved production
- Easy to change or replace (Does not require tools)
- Lowers fastener install costs
- Available in hex sizes: .062 (1/16”), .078 (5/64), .094 (3/32”)

1-Piece Hex Key System

2-Piece Hex Key System

Hex Key

Hex Key Holder with Set Screw

Note: 1-pc and 2-pc hex keys systems are interchangeable

Optional “Quick Change Socket System”

The Arconic tool can be equipped with the “Quick Change” socket feature allowing the operator to easily change the socket and hex key size to install a range of fasteners. Usually one tool has the torque capability to install two or more diameters of collars.

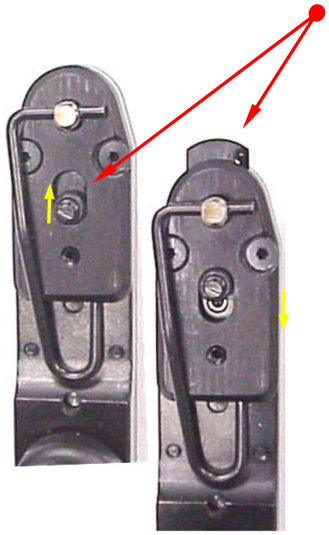

1. Slide the release lever forward, releasing the socket

2. With the release lever forward, a different socket can easily be inserted and is locked in place by pushing the release lever to the locked position.

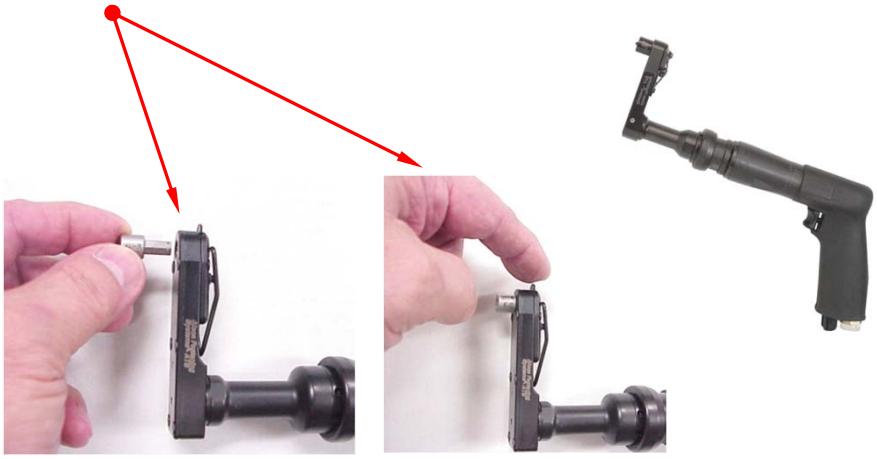

Standard Arconic 1-Piece Hex Keys
(worn or broken keys are easily changed without special tooling)

Frangible Collar Assembly Tools

Table of Contents

Pistol Grip Power Tools. . . . . Section 1

17° Offset Power Tools . . . . . Section 2

90° Offset Power Tools . . . . . Section 3

90° Right Angle Tools . . . . . Section 4

Hand Installation Tools &
Hex Key Accessories . . . . . Section 5

Collar Removal Tools . . . . . Section 6

Sales & Service:
Arconic Fastening Systems
Assembly Tool Systems Division
801 S. Placentia Avenue
Fullerton, CA 92831 USA

714-278-8908 Customer Service
714-871-4821 FAX

Frangible Collar Assembly Tools

Pistol Grip Power Tools

SECTION 1

Arconic Fastening Systems

ARCONIC

Frangible Collar Assembly Tools

Pistol Grip Extended Drive Shaft Options

Table 4

Drive Shaft Extended Length

Code	Extended Shaft Length	Index Unit
A	-	With
B	-	Without
C	2.0" (50.8mm)	With
D	2.0" (50.8mm)	Without
G	6.0" (152.4mm)	With
H	6.0" (152.4mm)	Without

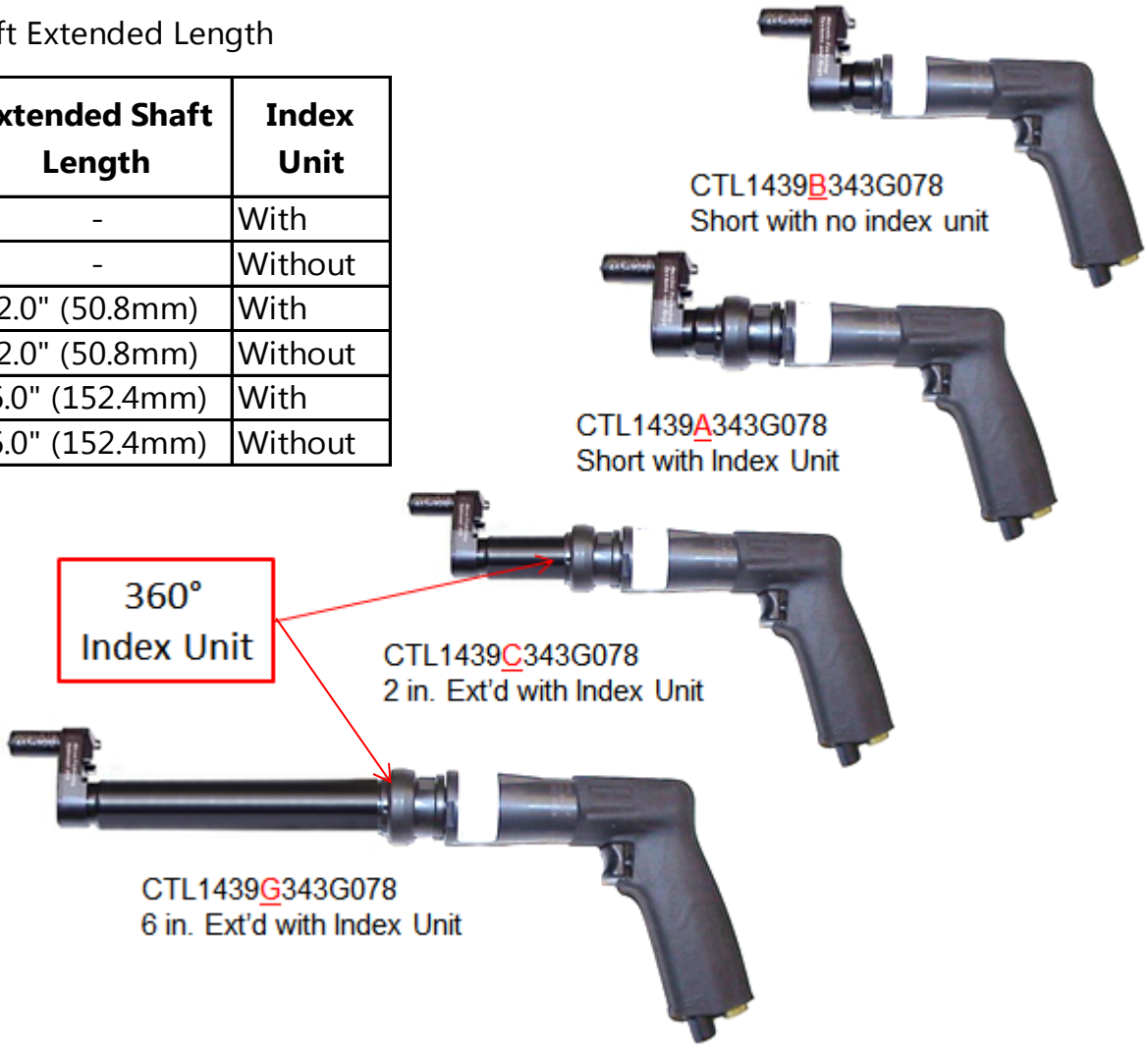

Index units are highly recommended, this feature allows the gear head to rotate and lock into place every 45° increasing the utility in various locations.

Offset Pistol Grip Tools

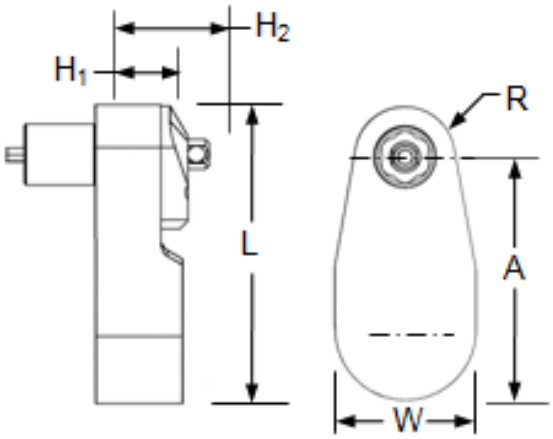

Max Torque 120 In-Lb

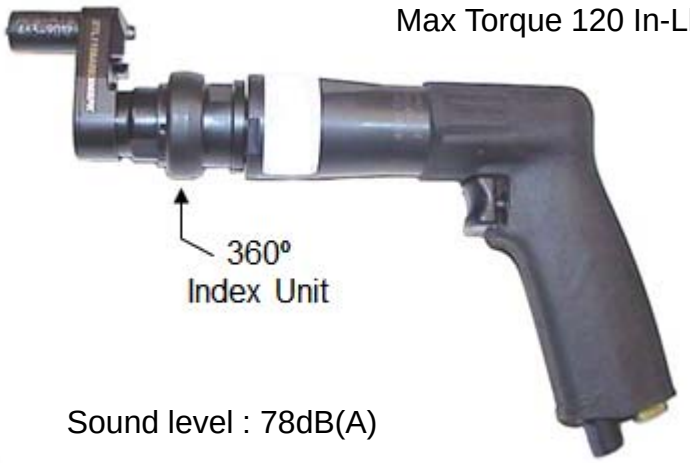

Sound level : 78dB(A)

Model Number	No. of Gears	A	H_1	H_2	L	W	R
CTL1428	3	1.25" [31.8mm]	.47" [11.9mm]	.81" [20.5mm]	2.11" [53.5mm]	1.0" [25.4mm]	.35" [8.9mm]

Table 1
Frangible Collar
Hex Size (Across Flats)

Code	Hex Size
219	7/32"
250	1/4"
312	5/16"
343	11/32"
437	7/16"

Table 2
Extended Socket Length

Code	Extension
A	Flush
C	3/8"
D	1/2"
E	5/8"
F	3/4"
G	1.0"
J	2.0"

Table 3a
Key Hex Size

Code	Hex Size
062	1/16"
078	5/64"
094	3/32"

Table 3b
Aster™ Key

Code	Dia.
000	No Key
AK2	-2
AK3	-3
AK3A	-3A
AK4	-4

Table 4
Drive Shaft Lenth with 360º Index Capability

Code	Length	Index Unit
A	-	With
C	2.0"	With
G	6.0"	With

Largest flush socket size is (.312) 5/16" A/F

Example of Complete Tool Model Number:

CTL1428 C 312 E 078

- 078 — Hex Key Size (Table 3a) or Aster ™ Key Size (Table 3b)
- E — Extended Socket Length (Table 2)
- 312 — Fastener Hex Size (Table 1)
- C — Ext'd. Drive Shaft (Table 4)
- CTL1428 — Tool Model Number

Offset Pistol Grip Tools

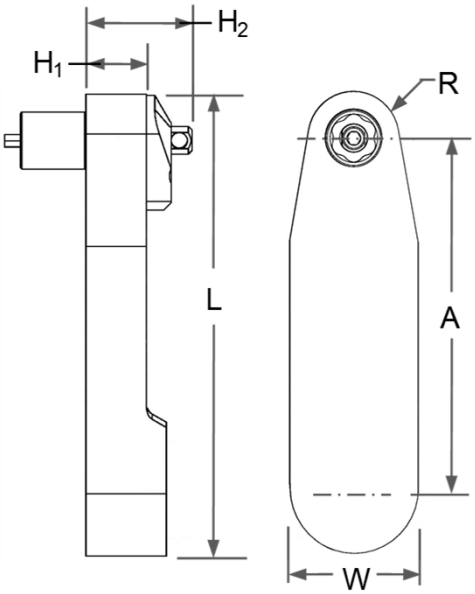

Max Torque 140 In-Lbs

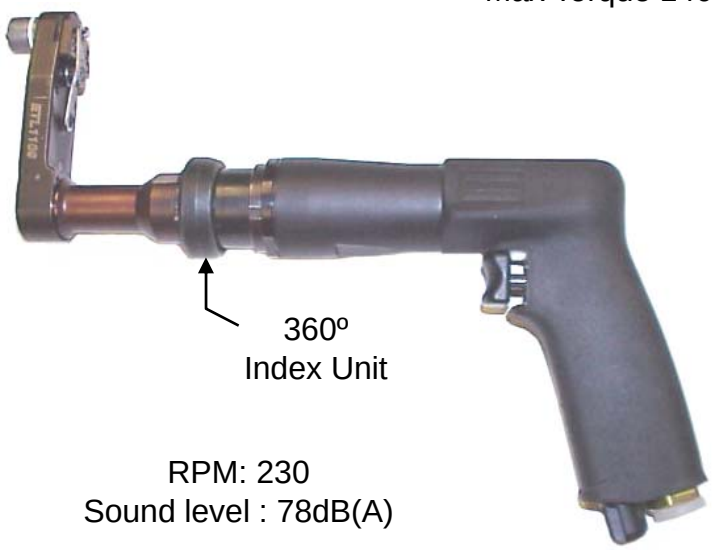

RPM: 230
Sound level : 78dB(A)

Model Number	No. of Gears	A	H_1	H_2	L	W	R
CTL1439	5	2.68" [68.1mm]	.38" [9.5mm]	.69" [17.5mm]	3.53" [89.7mm]	1.0" [25.4mm]	.35" [8.8mm]

Table 1
Frangible Collar
Hex Size (Across Flats)

Code	Hex Size
219	7/32"
250	1/4"
312	5/16"
343	11/32"
437	7/16"

Table 2
Extended Socket Length

Code	Extension
A	Flush
C	3/8"
D	1/2"
E	5/8"
F	3/4"
G	1.0"
J	2.0"

Table 3a
Key Hex Size

Code	Hex Size
062	1/16"
078	5/64"
094	3/32"

Table 3b
Aster™ Key

Code	Dia.
000	No Key
AK2	-2
AK3	-3
AK3A	-3A
AK4	-4

Table 4
Drive Shaft Lenth with 360º Index Capability

Code	Length	Index Unit
A	-	With
C	2.0"	With
G	6.0"	With

Maximum Flush Socket is 5/16” (.312) Hex

Example of Complete Tool Model Number:

CTL1439 C 312 E 078

- 078 — Hex Key Size (Table 3a) or Aster™ Key Size (Table 3b)
- E — Extended Socket Length (Table 2)
- 312 — Fastener Hex Size (Table 1)
- C — Ext’d. Drive Shaft (Table 4)
- CTL1439 — Tool Model Number

Offset Pistol Grip Tools

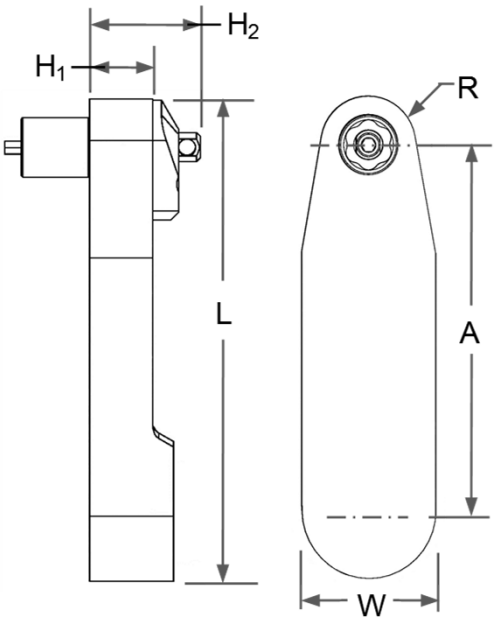

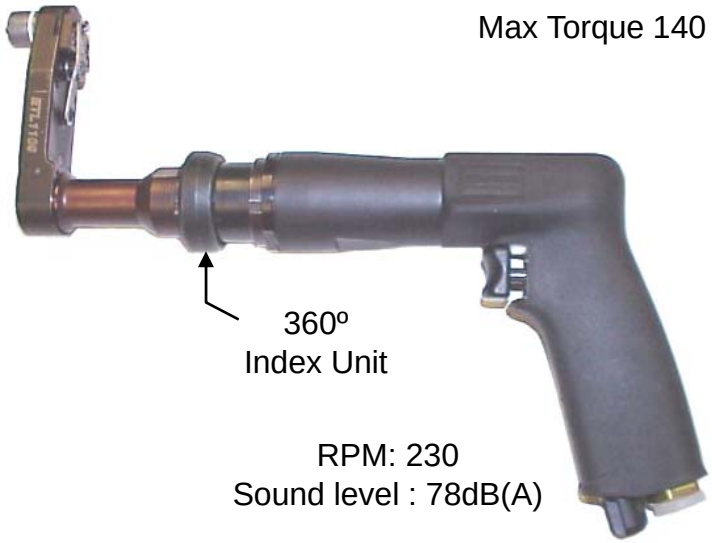

Max Torque 140 In-Lb

RPM: 230
Sound level : 78dB(A)

Model Number	No. of Gears	A	H_1	H_2	L	W	R
CTL1429	5	2.68 [68.1mm]	.47 [11.9mm]	.81 [20.5mm]	3.53 [89.7mm]	1.0 [25.4mm]	.35 [8.8mm]

Table 1
Frangible Collar Hex Size (Across Flats)

Code	Hex Size
219	7/32"
250	1/4"
312	5/16"
343	11/32"
437	7/16"

Table 2
Extended Socket Length

Code	Extension
A	Flush
C	3/8"
D	1/2"
E	5/8"
F	3/4"
G	1.0"
J	2.0"

Table 3a
Key Hex Size

Code	Hex Size
062	1/16"
078	5/64"
094	3/32"

Table 3b
Aster™ Key

Code	Dia.
000	No Key
AK2	-2
AK3	-3
AK3A	-3A
AK4	-4

Table 4
Drive Shaft Lenth with 360º Index Capability

Code	Length	Index Unit
A	-	With
C	2.0"	With
G	6.0"	With

Maximum Flush Socket is 5/16" (.312) Hex

Example of Complete Tool Model Number:

CTL1429 C 312 E 078

- 078 — Hex Key Size (Table 3a) or Aster™ Key Size (Table 3b)
- E — Extended Socket Length (Table 2)
- 312 — Fastener Hex Size (Table 1)
- C — Ext'd. Drive Shaft (Table 4)
- CTL1429 — Tool Model Number

Offset Pistol Grip Tools

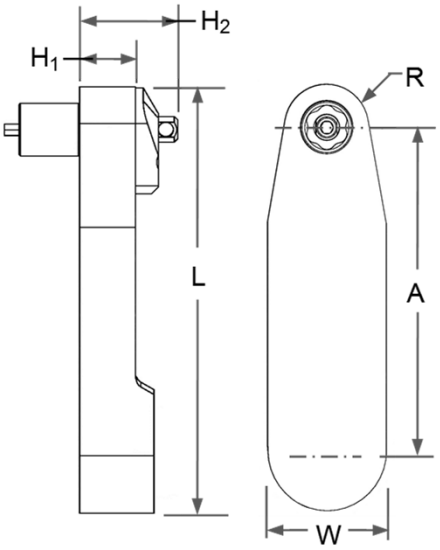

Max Torque 160 in-lbs.

Model Number	No. of Gears	A	H_1	H_2 Ref.	L	W	R
CTL1452A	5	2.72" [69.0mm]	.38" [9.5mm]	.72" [18.5mm]	3.7" [94.7mm]	1.0" [25.4mm]	.39" [10.0mm]

Table 1
Frangible Collar Hex Size (Across Flats)

Code	Hex Size
219	7/32"
250	1/4"
312	5/16"
343	11/32"
375	3/8"
437	7/16"

Table 2
Ext'd.Socket Length

Code	Extension
A	Flush
C	3/8"
D	1/2"
E	5/8"
G	1.0"
J	2.0"

Table 3
Key Hex Size

Code	Hex Size
000	No Key
078	5/64"
094	3/32"
125T	1/8"

Table 4
Drive Shaft Length with 360º Index Unit

Code	Length
A	-
C	2.0"
G	6.0"

Max flush socket size is .343 (11/32”)

Example of Complete Tool Model Number:

CTL1452 C 343 A 078

- 078 — Hex Key Size (Table 3)
- A — Extended Socket Length (Table 2)
- 343 — Fastener Hex Size (Table 1)
- C — Drive Shaft Length (Table 4)
- CTL1452 — Tool Model Number

Offset Pistol Grip Tools

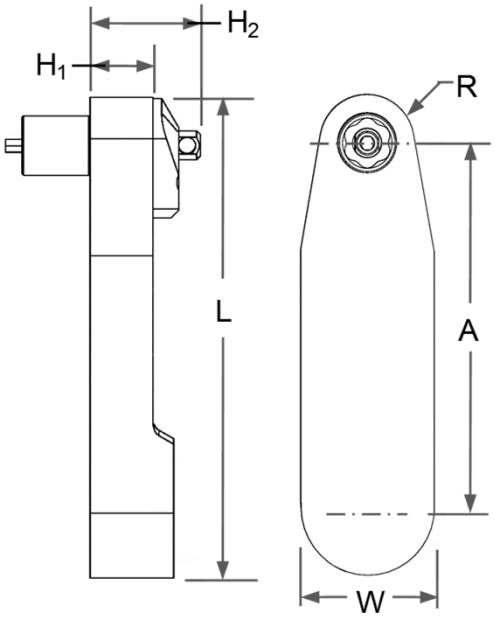

Max Torque 140 in-lbs.

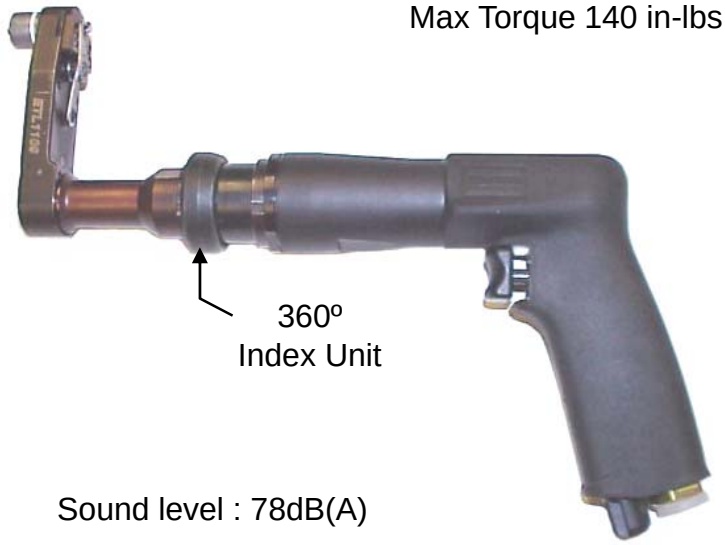

Sound level : 78dB(A)

Model Number	No. of Gears	A	H_1	H_2	L	W	R
CTL1438	7	4.13" [104.9mm]	.47" [11.9mm]	.81" [20.5mm]	4.98" [126.5mm]	1.0" [25.4mm]	.35" [8.8mm]

Table 1
Frangible Collar
Hex Size (Across Flats)

Code	Hex Size
219	7/32"
250	1/4"
312	5/16"
343	11/32"
375	3/8"
437	7/16"

Table 2
Ext'd.Socket Length

Code	Extension
C	0.375"
D	0.500"
E	0.625"
G	1.0"
J	2.0"

Table 3
Key Hex Size

Code	Size
062	1/16" Hex Key
078	5/64" Hex Key
094	3/32" Hex Key

Table 4
Drive Shaft Length
with 360º Index Unit

Code	Length
A	-
C	2.0"
G	6.0"

Largest flush socket size is 5/16" A/F

Example of Complete Tool Model Number:

CTL1438 C 343 D 078

- 078 — Hex Key Size (Table 3)
- D — Extended Socket Length (Table 2)
- 343 — Fastener Hex Size (Table 1)
- C — Ext'd. Drive Shaft (Table 4)
- CTL1438 — Tool Model Number

Offset Pistol Grip Tools

Max Torque 80 in_lbs

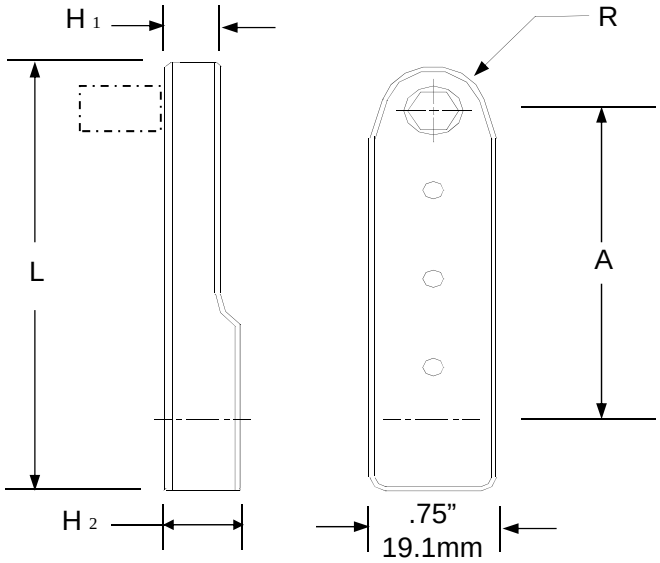

Model Number	No. of Gears	A	H1	H2	L	R
CTL1408	5	2.38	.34 [8.6mm]	.46	4.18 [106.1mm]	.31 [7.9mm]

Table 1
Hex Size (Across Flats)

Code	Hex Size
219	7/32"
250	1/4"

Table 2
Ext'd.Socket Length

Code	Extension
A	Flush
B	1/4"
C	3/8"
D	1/2"

Table 3a
Key Hex Size

Code	Size
000	No Key
062	1/16"
078	5/64"

Table 3b
Aster™ Key

Code	Dia.
000	No Key
AK2	-2
AK3	-3
AK3A	-3A

Example of Complete Tool Model Number:

CTL1408A 312 D 000

- 000 — Hex Key Size (Table 3a or 3b)
- D — Extended Socket Length (Table 2)
- 312 — Fastener Hex Size (Table 1)
- CTL1408A — Tool Model Number

Offset Pistol Grip Tools

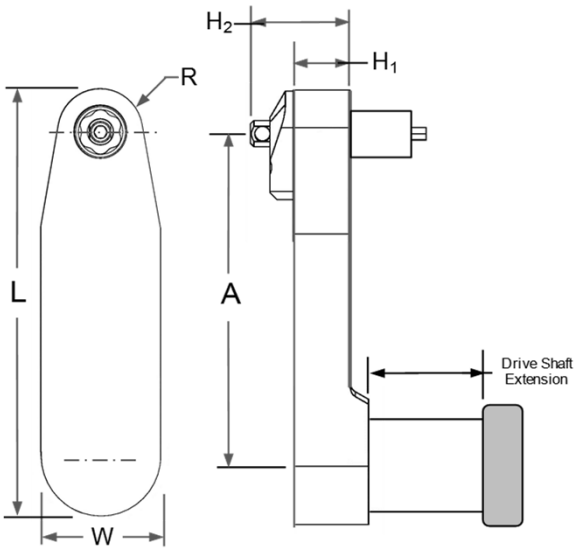

Max Torque 130 in-lbs.

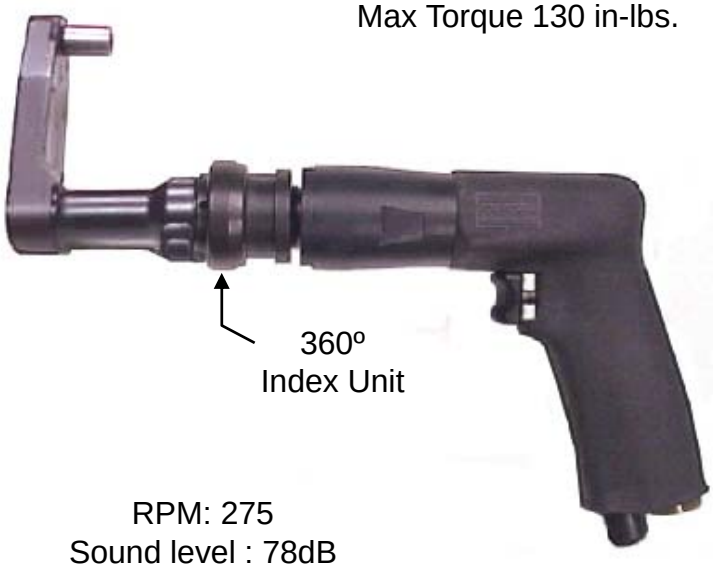

RPM: 275
Sound level : 78dB

Back Drive Socket Position

Model Number	No. of Gears	A	H_1	H_2	L	R
CTL1449	4	1.96 [49.8mm]	.47 [11.8mm]	.81 [20.5mm]	2.81 [71.4mm]	.35 [8.8mm]

Table 1
Frangible Collar
Hex Size (Across Flats)

Code	Hex Size
219	7/32"
250	1/4"
312	5/16"
343	11/32"
375	3/8"
437	7/16"

Table 2
Ext'd.Socket Length

Code	Extension
C	0.375"
D	0.500"
E	0.625"
G	1.0"
J	2.0"

Table 3
Key Hex Size

Code	Size
062	1/16" Hex Key
078	5/64" Hex Key
094	3/32" Hex Key

Table 4
Drive Shaft Length
with 360º Index Unit

Code	Length
A	-
C	2.0"
G	6.0"

Largest flush socket gear size is 5/16” A/F

Example of Complete Tool Model Number:

CTL1449 C 343 D 078

- 078 — Hex Key Size (Table 3)
- D — Extended Socket Length (Table 2)
- 343 — Fastener Hex Size (Table 1)
- C — Ext’d. Drive Shaft (Table 4)
- CTL1449 — Tool Model Number

ARCONIC

Offset Pistol Grip Tools

Max Torque 140 in-lbs.

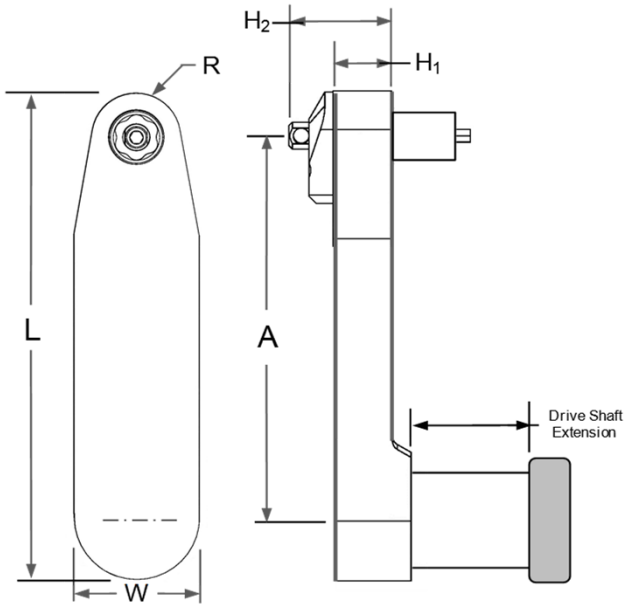

RPM: 230
Sound level : 78dB(A)

Back Drive Socket Position

Model Number	No. of Gears	A	H_1	H_2	L	R
CTL1434	6	3.47 [88.1mm]	.47 [11.9mm]	.81 [20.5mm]	4.39 [111.7mm]	.43 [10.8mm]

Table 1
Frangible Collar
Hex Size (Across Flats)

Code	Hex Size
219	7/32"
250	1/4"
312	5/16"
343	11/32"
375	3/8"

Table 2
Ext'd.Socket Length

Code	Extension
C	0.375"
D	0.500"
E	0.625"
G	1.0"
J	2.0"

Table 3
Key Hex Size

Code	Size
062	1/16" Hex Key
078	5/64" Hex Key
094	3/32" Hex Key

Table 4
Drive Shaft Length
with 360º Index Unit

Code	Length
A	-
C	2.0"
G	6.0"

Largest flush socket gear size is 5/16" A/F

Example of Complete Tool Model Number:

CTL1434 C 343 D 078

- 078 — Hex Key Size (Table 3)
- D — Extended Socket Length (Table 2)
- 343 — Fastener Hex Size (Table 1)
- C — Ext'd. Drive Shaft (Table 4)
- CTL1434 — Tool Model Number

ARCONIC

Offset Pistol Grip Tools

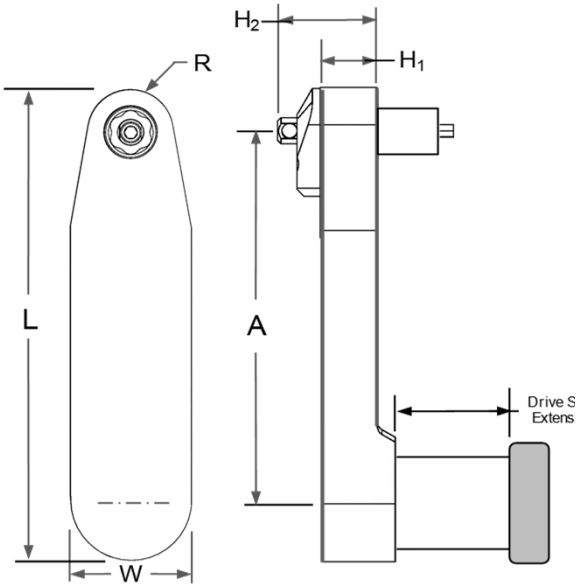

Max Torque 140 in-lbs.

RPM: 230
Sound level : 78dB(A)

Back Drive Socket Position

Model Number	No. of Gears	A	H_1	H_2	L	R
CTL1715	6	3.38 [85.9mm]	.47 [11.9mm]	.66 [16.7mm]	4.20 [106.7mm]	.33 [8.3mm]

Table 1
Frangible Collar
Hex Size (Across Flats)

Code	Hex Size
219	7/32"
250	1/4"
312	5/16"

Table 2
Ext'd.Socket Length

Code	Extension
C	0.375"
D	0.500"
E	0.625"
G	1.0"
J	2.0"

Table 3
Key Hex Size

Code	Size
062	1/16" Hex Key
078	5/64" Hex Key
094	3/32" Hex Key

Table 4
Drive Shaft Length
with 360º Index Unit

Code	Length
A	-
C	2.0"
G	6.0"

Largest flush socket gear size is 5/16" A/F

Example of Complete Tool Model Number:

CTL1715 C 312 D 078

- 078 — Hex Key Size (Table 3)
- D — Extended Socket Length (Table 2)
- 312 — Fastener Hex Size (Table 1)
- C — Ext'd. Drive Shaft (Table 4)
- CTL1715 — Tool Model Number

Offset Pistol Grip Tools

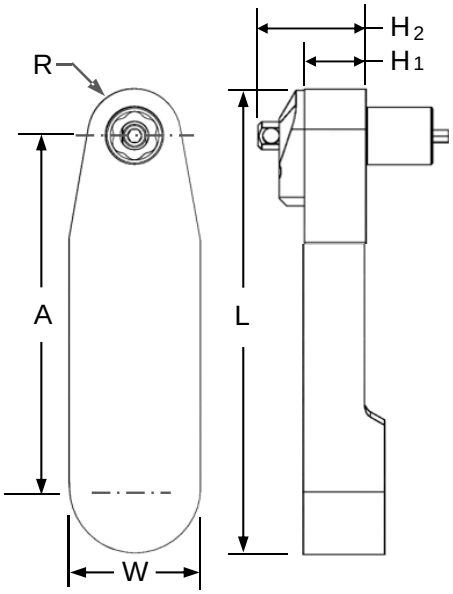

Back Drive Socket Position

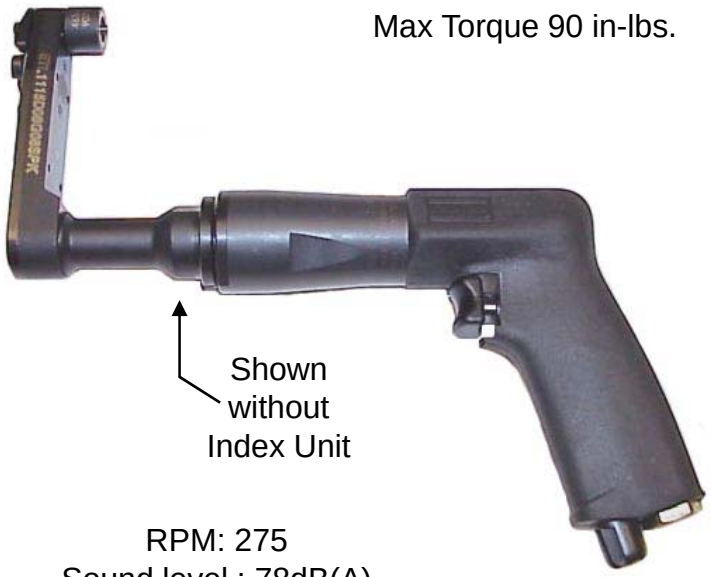

Max Torque 90 in-lbs.

RPM: 275
Sound level : 78dB(A)

Model Number	No. of Gears	A	H_1	H_2	L	W	R
CTL1424	6	3.38" [85.8mm]	.47" [11.9mm]	.81" [20.5mm]	4.05" [102.9mm]	1.0" [25.4mm]	.35" [8.8mm]

Table 1
Frangible Collar
Hex Size (Across Flats)

Code	Hex Size
219	7/32"
250	1/4"
312	5/16"
343	11/32"
375	3/8"
437	7/16"

Table 2
Ext'd.Socket Length

Code	Extension
A	Flush
C	0.375"
D	0.500"
E	0.625"
G	1.0"
J	2.0"

Table 3
Key Hex Size

Code	Hex Size
062	1/16"
078	5/64"
094	3/32"

Table 4
Drive Shaft Length
with 360º Index Unit

Code	Length
A	-
C	2.0"
G	6.0"

Largest flush socket gear size is 5/16" A/F

Example of Complete Tool Model Number:

CTL1424 C 312 D 094

- 094 — Hex Key Size (Table 3)
- D — Extended Socket Length (Table 2)
- 312 — Fastener Hex Size (Table 1)
- C — Ext'd. Drive Shaft (Table 4)
- CTL1424 — Tool Model Number

Offset Pistol Grip Tools

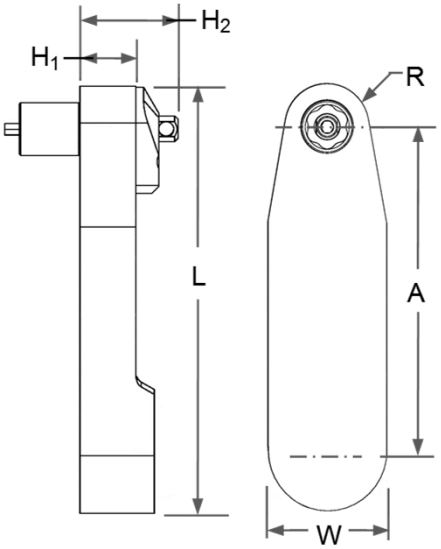

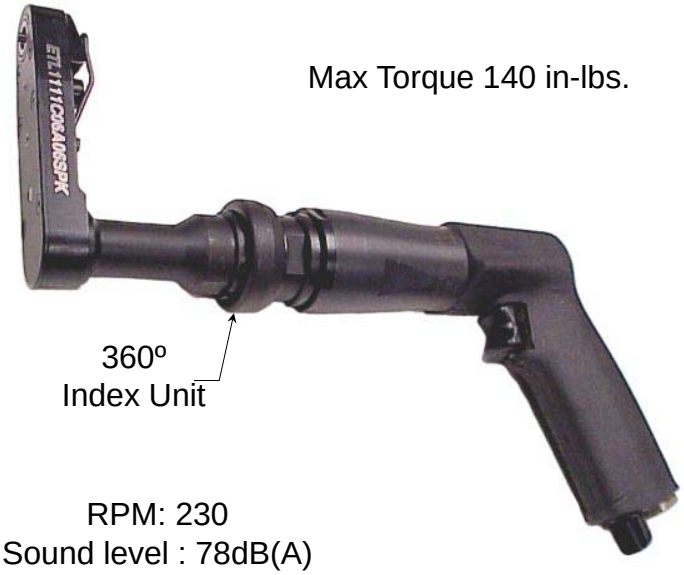

Max Torque 140 in-lbs.

360º
Index Unit

RPM: 230
Sound level : 78dB(A)

Model Number	No. of Gears	A	H_1	H_2 Ref.	L	W	R
CTL1461	5	2.75" [69.9mm]	.47" [11.9mm]	.81" [20.5mm]	3.68" [93.3mm]	1.0" [25.4mm]	.43" [10.8mm]

Table 1
Frangible Collar
Hex Size (Across Flats)

Code	Hex Size
219	7/32"
250	1/4"
312	5/16"
343	11/32"
375	3/8"
437	7/16"

Table 2
Ext'd.Socket Length

Code	Extension
A	Flush
C	0.375"
D	0.500"
E	0.625"
G	1.0"
J	2.0"

Table 3
Key Hex Size

Code	Size
062	1/16" Hex Key
078	5/64" Hex Key
094	3/32" Hex Key
125T	1/8" Hex Key

Table 4
Drive Shaft Extended Length

Code	Length	Index Unit
A	-	With
B	-	Without
C	2.0"	With
D	2.0"	Without
G	6.0"	With
H	6.0"	Without

24P

Example of Complete Tool Model Number:

CTL1461 C 343 A 078

- 078 — Hex Key Size (Table 3)
- A — Extended Socket Length (Table 2)
- 343 — Fastener Hex Size (Table 1)
- C — Ext'd. Drive Shaft (Table 4)
- CTL1461 — Tool Model Number

Offset Pistol Grip Tools

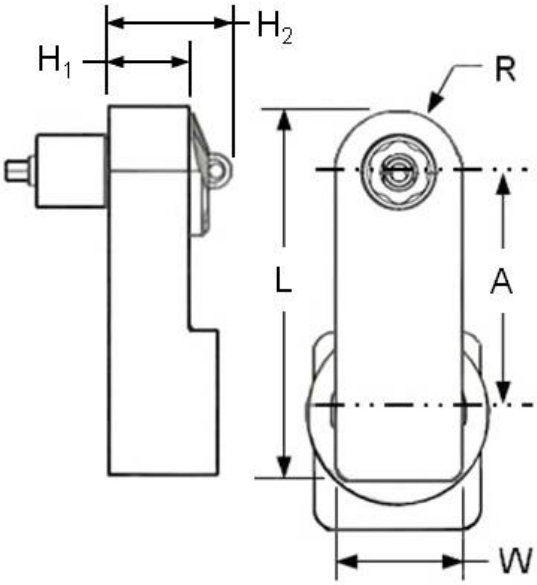

Torque Max: 170 in-lbs

RPM: 220
Sound level : 78dB(A)

Model Number	No. of Gears	A	H_1	H_2	L	W	R
CTL1415	3	1.62" [41.1mm]	.68" [17.3mm]	1.0" [25.2mm]	2.69" [68.3mm]	1.0" (25.4mm)	.50" (12.2mm)

The above tool model is designed for use with a flush socket gear or extended sockets.

Table 1
Frangible Collar
Hex Size (Across Flats)

Code	Hex Size
375	3/8"
437	7/16"
500	1/2"
562	9/16"

Table 2
Ext'd.Socket Length

Code	Extension
C	0.375"
D	0.500"
E	0.625"
G	1.0"
J	2.0"

Table 3
Hex Keys
(See Table 5, Accessories)

Code	Size
094T	3/32" Hex Key
125T	1/8" Dia. Hex Key
156T	5/32" Dia. Hex Key
187T	3/16" Dia. Hex Key

Table 4
Drive Shaft Extended Length

Code	Length	Index Unit
A	-	With
B	-	Without
C	2.0"	With
D	2.0"	Without

Example of Complete Tool Model Number:

CTL1415 A 500 G 156T

- 156T — Hex Key Size (Table 3)
- G — Extended Socket Length (Table 2)
- 500 — Fastener Hex Size (Table 1)
- A — Ext'd. Drive Shaft (Table 4)
- CTL1415 — Tool Model Number

Offset Pistol Grip Tools

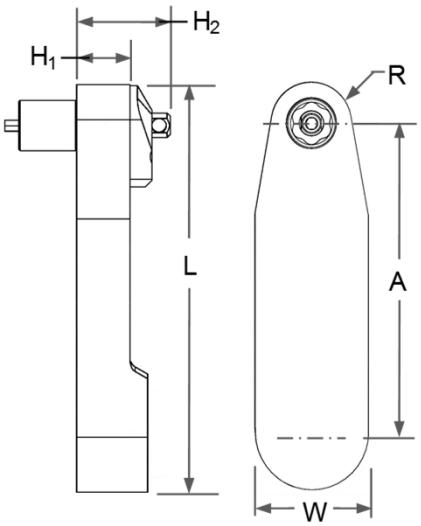

Tool Torque Range:
15-140 in-lbs.

360º
Index
Unit

RPM: 230
Sound level : 78dB(A)

Model Number	No. of Gears	A	H_1	H_2 Ref.	L	W	R
CTL1111	5	2.75" [69.9mm]	.47" [11.9mm]	.72" [18.4mm]	3.68" [93.3mm]	1.0" [25.4mm]	.43" [10.8mm]

Table 1
Frangible Collar
Hex Size (Across Flats)

Code	Hex Size
219	7/32"
250	1/4"
312	5/16"
343	11/32"
375	3/8"
437	7/16"

Table 2
Ext'd.Socket Length

Code	Extension
A	Flush
C	0.375"
D	0.500"
E	0.625"
G	1.0"
J	2.0"

Table 3
Key Hex Size

Code	Size
062	1/16" Hex Key
078	5/64" Hex Key
094	3/32" Hex Key
125T	1/8" Hex Key

Table 4
Drive Shaft Extended Length

Code	Length	Index Unit
A	-	With
B	-	Without
C	2.0"	With
D	2.0"	Without
G	6.0"	With
H	6.0"	Without

24P

Example of Complete Tool Model Number:

CTL1111 C 343 A 078

- 078 — Hex Key Size (Table 3)
- A — Extended Socket Length (Table 2)
- 343 — Fastener Hex Size (Table 1)
- C — Ext'd. Drive Shaft (Table 4)
- CTL1111 — Tool Model Number

Offset Pistol Grip Tools

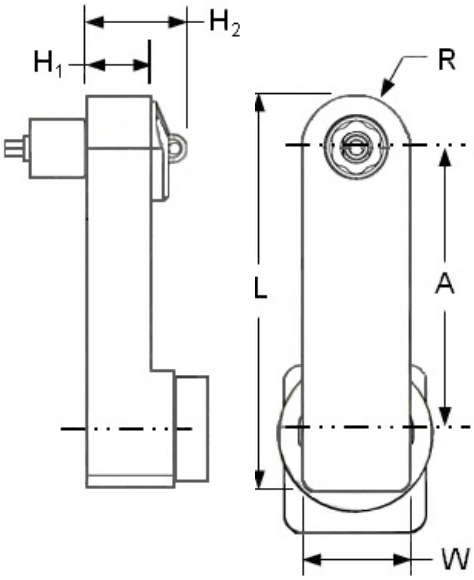

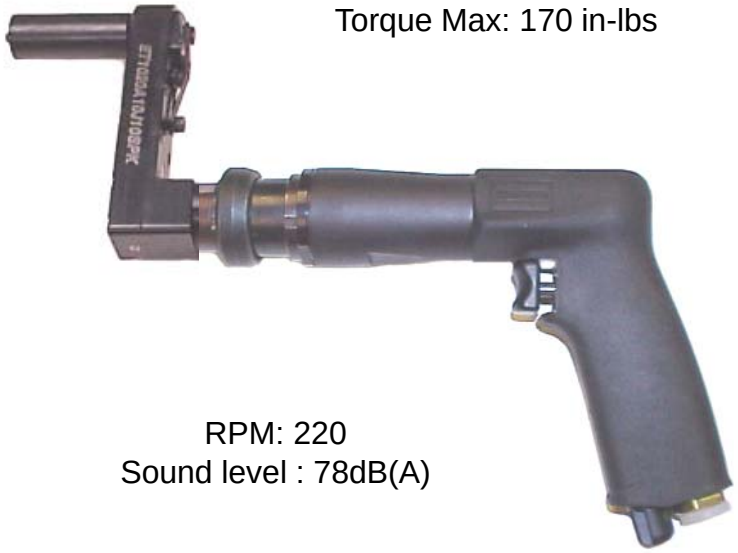

Torque Max: 170 in-lbs

RPM: 220
Sound level : 78dB(A)

Model Number	No. of Gears	A	H_1	H_2 (With Hex Key)	L	W	R
CTL1420	5	3.38"" [85.9mm]	.68" [17.3mm]	1.0" [25.4mm]	4.44" [112.7mm]	1.0" (25.4mm)	.50" (12.2mm)

The above tool model is designed for use with a flush socket gear or extended sockets.

Table 1
Frangible Collar
Hex Size (Across Flats)

Code	Hex Size
375	3/8"
437	7/16"
500	1/2"
562	9/16"

Table 2
Ext'd.Socket Length

Code	Extension
C	0.375"
D	0.500"
E	0.625"
G	1.0"
J	2.0"

Table 3
Hex Keys
(See Table 5, Accessories)

Code	Size
094T	3/32" Hex Key
125T	1/8" Dia. Hex Key
156T	5/32" Dia. Hex Key
187T	3/16" Dia. Hex Key

Table 4
Drive Shaft Extended Length

Code	Length	Index Unit
A	-	With
B	-	Without
C	2.0"	With
D	2.0"	Without

Example of Complete Tool Model Number:

CTL1420 A 500 G 156T

- 156T — Hex Key Size (Table 3)
- G — Extended Socket Length (Table 2)
- 500 — Fastener Hex Size (Table 1)
- A — Ext'd. Drive Shaft (Table 4)
- CTL1420 — Tool Model Number

Offset Pistol Grip Tools

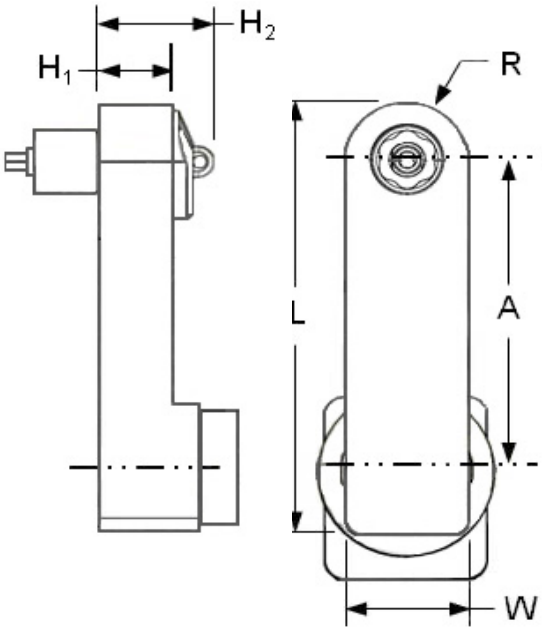

Torque Max: 210 in-lbs

RPM: 220
Sound level : 78dB(A)

Model Number	No. of Gears	A	H_1	H_2 (With Hex Key)	L	W	R
CTL1436	7	5.13"" [130.3mm]	.68" [17.3mm]	1.0" [25.4mm]	6.19" [157.3mm]	1.0" (25.4mm)	.50" (12.2mm)

The above tool model is designed for use with a flush socket gear or extended sockets.

Table 1
Frangible Collar
Hex Size (Across Flats)

Code	Hex Size
375	3/8"
437	7/16"
500	1/2"
562	9/16"

Table 2
Ext'd.Socket Length

Code	Extension
C	0.375"
D	0.500"
E	0.625"
G	1.0"
J	2.0"

Table 3
Hex Keys
(See Table 5, Accessories)

Code	Size
094T	3/32" Hex Key
125T	1/8" Dia. Hex Key
156T	5/32" Dia. Hex Key
187T	3/16" Dia. Hex Key

Table 4
Drive Shaft Extended Length

Code	Length	Index Unit
A	-	With
B	-	Without
C	2.0"	With
D	2.0"	Without

Example of Complete Tool Model Number:

CTL1436 A 500 G 156T

- 156T — Hex Key Size (Table 3)
- G — Extended Socket Length (Table 2)
- 500 — Fastener Hex Size (Table 1)
- A — Ext'd. Drive Shaft (Table 4)
- CTL1436 — Tool Model Number

Offset Pistol Grip Tools

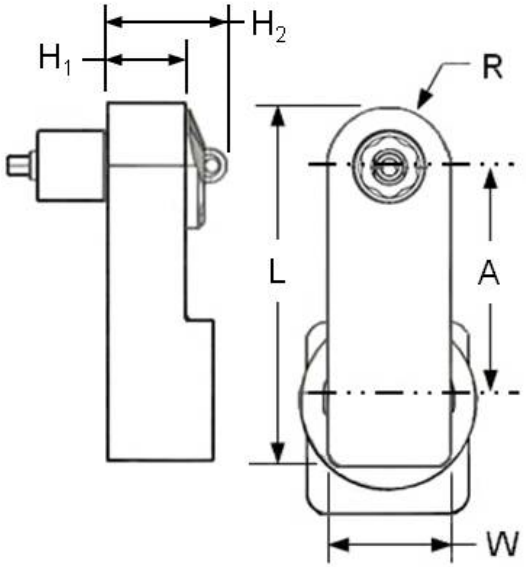

Torque Max: 210 in-lbs

Ref: LUM21HR01-K

RPM: 110
Sound level : 78dB(A)

Model Number	No. of Gears	A	H_1	H_2	L	W	R
CTH1415	3	1.62" [41.1mm]	.68" [17.3mm]	1.0" [25.4mm]	2.69" [68.3mm]	1.0" (25.4mm)	.50" (12.2mm)

The above tool model is designed for use with a flush socket gear or extended sockets.

Table 1
Frangible Collar
Hex Size (Across Flats)

Code	Hex Size
375	3/8"
437	7/16"
500	1/2"
562	9/16"

Table 2
Ext'd.Socket Length

Code	Extension
C	0.375"
D	0.500"
E	0.625"
G	1.0"
J	2.0"

Table 3
Hex Keys
(See Table 5, Accessories)

Code	Size
094T	3/32" Hex Key
125T	1/8" Dia. Hex Key
156T	5/32" Dia. Hex Key
187T	3/16" Dia. Hex Key

Table 4
Drive Shaft Extended Length

Code	Length	Index Unit
A	-	With
B	-	Without
C	2.0"	With
D	2.0"	Without

Example of Complete Tool Model Number:

CTH1415 A 500 G 156T

- 156T — Hex Key Size (Table 3)
- G — Extended Socket Length (Table 2)
- 500 — Fastener Hex Size (Table 1)
- A — Ext'd. Drive Shaft (Table 4)
- CTH1415 — Tool Model Number

Offset Pistol Grip Tools

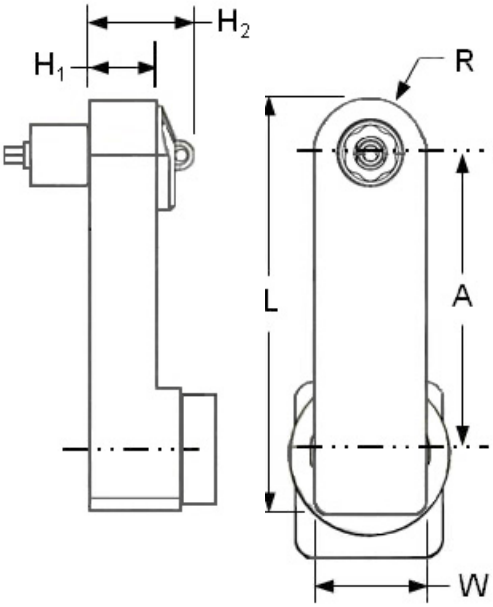

Torque Max: 210 in-lbs

Ref: LUM21HR01-K

RPM: 110
Sound level : 78dB(A)

Model Number	No. of Gears	A	H_1	H_2 (With Hex Key)	L	R
CTH1420	5	3.38 [85.9mm]	.68 [17.3mm]	1.0" [25.4mm]	4.44 [113.0mm]	.50 [12.7mm]

The above tool model is designed for use with a flush socket gear or extended sockets.

Table 1
Frangible Collar
Hex Size (Across Flats)

Code	Hex Size
375	3/8"
437	7/16"
500	1/2"
562	9/16"

Table 2
Ext'd.Socket Length

Code	Extension
C	0.375"
D	0.500"
E	0.625"
G	1.0"
J	2.0"

Table 3
Hex Keys
(See Table 5, Accessories)

Code	Size
094T	3/32" Hex Key
125T	1/8" Dia. Hex Key
156T	5/32" Dia. Hex Key
187T	3/16" Dia. Hex Key

Table 4
Drive Shaft Extended Length

Code	Length	Index Unit
A	-	With
B	-	Without
C	2.0"	With
D	2.0"	Without

Example of Complete Tool Model Number:

CTH1420 A 500 G 156T

- 156T — Hex Key Size (Table 3)
- G — Extended Socket Length (Table 2)
- 500 — Fastener Hex Size (Table 1)
- A — Ext'd. Drive Shaft (Table 4)
- CTH1420 — Tool Model Number

Straight Pistol Grip Tools

Torque Max: 135 in-lbs

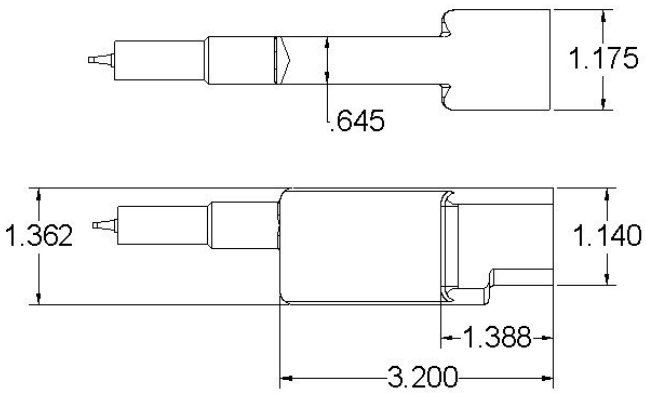

RPM at Socket: 290

Table 1
Frangible Collar
Hex Size (Across Flats)

Code	Hex Size
219	7/32"
250	1/4"
282	9/32"
312	5/16"
343	11/32"

Table 2
Ext'd.Socket Length

Code	Extension
J	2.0"
L	3.0"
P	4.0"

Table 3
Key Hex Size

Code	**Size**	**Part No.**
062	1/16"	093-9450-062-CT
078	5/64"	093-9450-078-CT
094	3/32"	093-9450-094-CT

Example of Complete Tool Model Number:

CTL2028B 343 J 094

- 094 — Hex Key Size (Table 3)
- J — Extended Socket Length (Table 2)
- 343 — Fastener Hex Size (Table 1)
- CTL2028B — Tool Model Number

Straight Pistol Grip Tools

Torque Max: 160 in-lbs

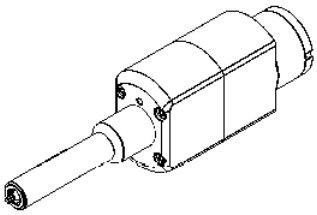

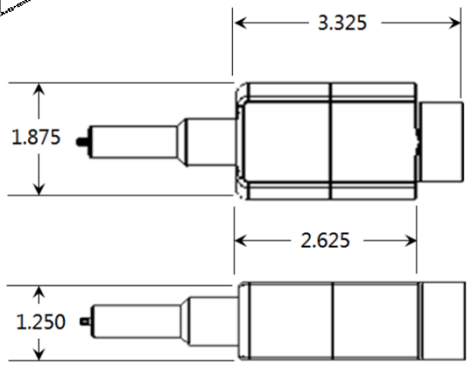

RPM at Socket: 290

Table 1
Frangible Collar
Hex Size (Across Flats)

Code	Hex Size
219	7/32"
250	1/4"
282	9/32"
312	5/16"
343	11/32"
375	3/8"
437	7/16"

Table 2
Ext'd.Socket Length

Code	Extension
J	2.0"
L	3.0"
P	4.0"

Table 3
Key Hex Size

Code	Size
062	1/16" Hex Key
078	5/64" Hex Key
094	3/32" Hex Key

Example of Complete Tool Model Number:

CT2005B 437 J 094

- 094 — Hex Key Size (Table 3)
- J — Extended Socket Length (Table 2)
- 437 — Fastener Hex Size (Table 1)
- CT2005B — Tool Model Number

Straight Pistol Grip Tools

Torque Max: 215 in-lbs

Tool Data:
Torque Capability: Up to 215 in. lbs. Maximum
Total Tool Length: 14.2" [360mm] without Socket
Total Wt: 3.62 lbs [1.64 kg]

Table 1
Frangible Collar
Hex Size (Across Flats)

Code	Hex Size
375	3/8"
437	7/16"
500	1/2"
562	9/16"
625	5/8"
750	3/4"

Table 2
Ext'd.Socket Length

Code	Extension
J	2.0"
L	3.0"
P	4.0"

Table 3
Key Hex Size

Code	Size
094	3/32" Hex Key
125	1/8" Hex Key
156	5/32" Hex Key
187	3/16" Hex Key

Example of Complete Tool Model Number:

CTH2005B 437 J 156

- 156 — Hex Key Size (Table 3)
- J — Extended Socket Length (Table 2)
- 437 — Fastener Hex Size (Table 1)
- CTH2005B — Tool Model Number

Frangible Collar Assembly Tools

17° Offset Power Tools

SECTION 2

Arconic Fastening Systems

ARCONIC

17° Offset Lever Tools

Torque Max: 130 in-lbs

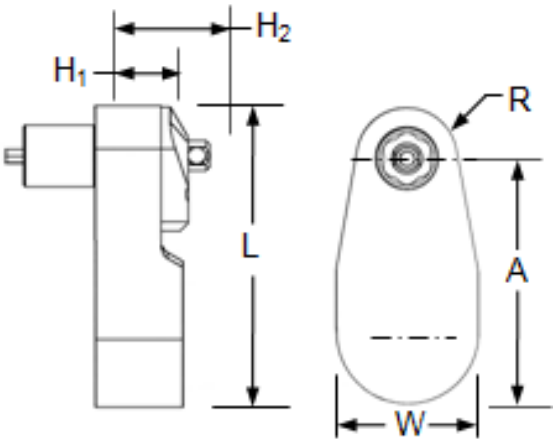

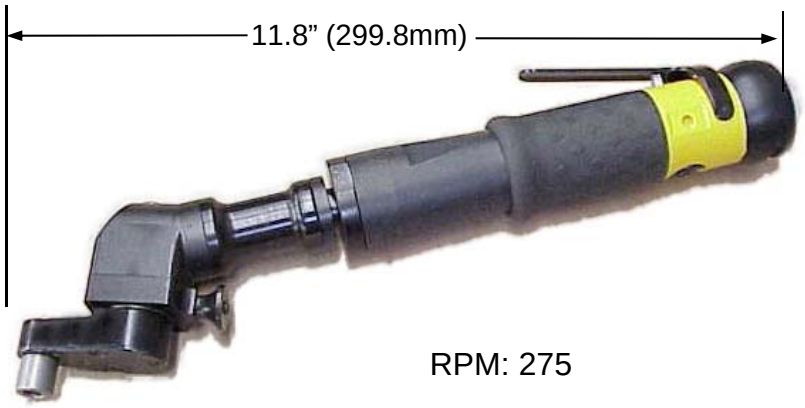

RPM: 275

Model Number	No. of Gears	A	H_1	H_2	L	W	R
CTL3428	3	1.25" [31.8mm]	.47" [11.9mm]	.81" [20.5mm]	2.11" [53.5mm]	1.0" [25.4mm]	.35" [8.9mm]

The above model tools are designed for use with extended sockets.

Table 1
Frangible Collar
Hex Size (Across Flats)

Code	Hex Size
219	7/32"
250	1/4"
312	5/16"
343	11/32"

Table 2
Ext'd.Socket Length

Code	Extension
A	Flush
C	0.375"
D	0.500"
E	0.625"
G	1.0"
J	2.0"

Table 3
Key Hex Size

Code	Size
062	1/16" Hex Key
078	5/64" Hex Key
094	3/32" Hex Key

24P

* Flush sockets only available in (.219, .250) hex sizes

Example of Complete Tool Model Number:

CTL3428A 343 G 078

- 078 — Hex Key Size (Table 3)
- G — Extended Socket Length (Table 2)
- 343 — Fastener Hex Size (Table 1)
- CTL3428A — Tool Model Number

17° Offset Lever Tools

Torque Max: 145 in-lbs

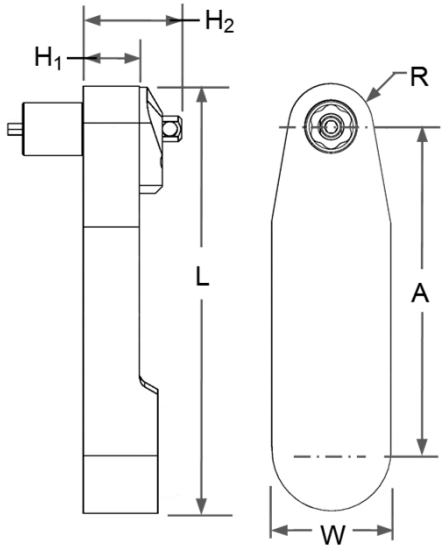

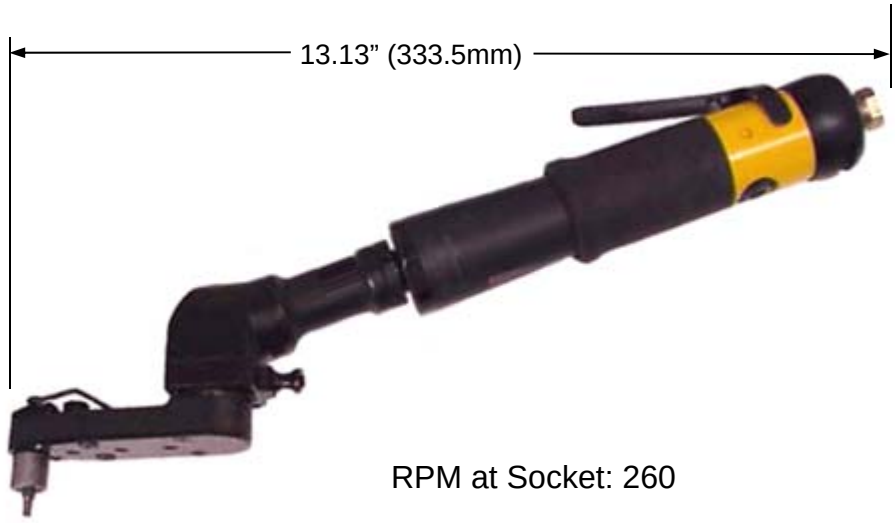

RPM at Socket: 260

Model Number	No. of Gears	A	H_1	H_2	L	W	R
CTL3429A	5	2.68" [68.1mm]	.47" [11.9mm]	.81" [20.5mm]	3.53" [89.7mm]	1.0" [25.4mm]	.35" [8.8mm]

Table 1
Frangible Collar
Hex Size (Across Flats)

Code	Hex Size
219	7/32"
250	1/4"
312	5/16"
343	11/32"
375	3/8"
437	7/16"

Table 2
Ext'd.Socket Length

Code	Extension
A *	Flush
C	0.375"
D	0.500"
E	0.625"
F	0.750"
G	1.0"
J	2.0"

Table 3
Key Hex Size

Code	Size
062	1/16" Hex Key
078	5/64" Hex Key
094	3/32" Hex Key

* Flush sockets only available in (.219, .250, .282, .312) hex sizes

Example of Complete Tool Model Number:

CTL3429A 343 F 078

- 078 — Hex Key Size (Table 3)
- F — Extended Socket Length (Table 2)
- 343 — Fastener Hex Size (Table 1)
- CTL3429A — Tool Model Number

17° Offset Lever Tools

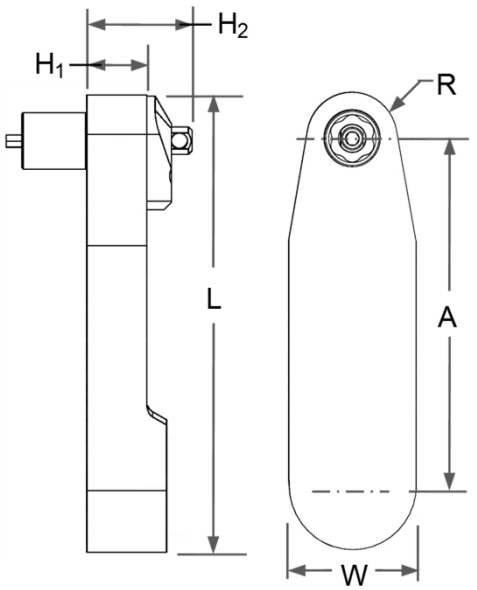

Torque Max: 120 in-lbs

RPM at Socket: 275

Model Number	No. of Gears	A	H_1	H_2	L	W	R
CTL3438	7	4.13" [104.9mm]	.47" [11.9mm]	.81" [20.5mm]	4.98" [126.5mm]	1.0" [25.4mm]	.35" [8.8mm]

Table 1
Frangible Collar
Hex Size (Across Flats)

Code	Hex Size
219	7/32"
250	1/4"
312	5/16"
343	11/32"
375	3/8"
437	7/16"

Table 2
Ext'd.Socket Length

Code	Extension
A*	Flush
C	0.375"
D	0.500"
E	0.625"
F	0.750"
G	1.0"
J	2.0"

Table 3
Key Hex Size

Code	Size
062	1/16" Hex Key
078	5/64" Hex Key
094	3/32" Hex Key

* Flush sockets available in (.250, .282 & .312) hex sizes

Example of Complete Tool Model Number:

CTL3438A 343 F 078

- 078 — Hex Key Size (Table 3)
- F — Extended Socket Length (Table 2)
- 343 — Fastener Hex Size (Table 1)
- CTL3438A — Tool Model Number

17° Offset Lever Tools

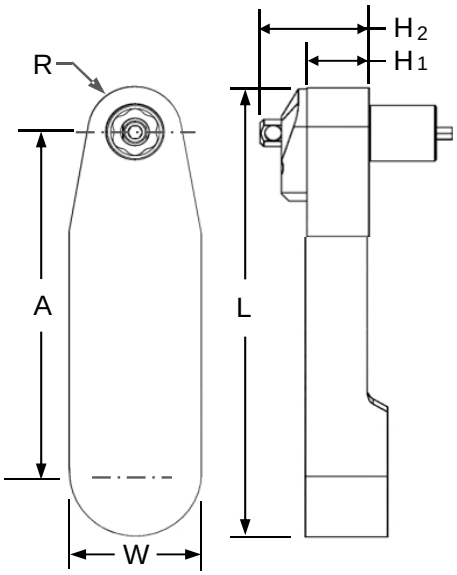

Torque Max: 120 in-lbs

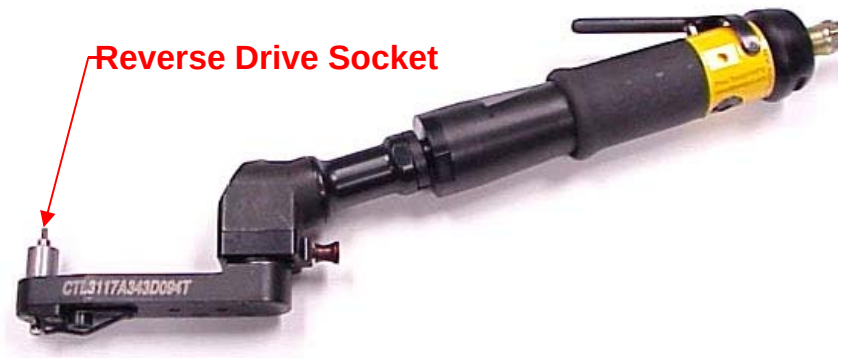

RPM at Socket: 275

Model Number	No. of Gears	A	H_1	H_2	L	W	R
CTL3424A	6	3.38" [85.8mm]	.47" [11.9mm]	.81" [20.5mm]	4.05" [102.9mm]	1.0" [25.4mm]	.35" [8.8mm]

Table 1
Frangible Collar
Hex Size (Across Flats)

Code	Hex Size
219	7/32"
250	1/4"
312	5/16"
343	11/32"
375	3/8"
437	7/16"

Table 2
Ext'd.Socket Length

Code	Extension
A*	Flush
C	0.375"
D	0.500"
E	0.625"
F	0.750"
G	1.0"
J	2.0"

Table 3
Key Hex Size

Code	Hex Size
062	1/16"
078	5/64"
094	3/32"

* Flush sockets available in (.220, .250, .282 & .312) hex sizes

Example of Complete Tool Model Number:

CTL3424A 343 F 078

- 078 — Hex Key Size (Table 3)
- F — Extended Socket Length (Table 2)
- 343 — Fastener Hex Size (Table 1)
- CTL3424A — Tool Model Number

17° Offset Lever Tools

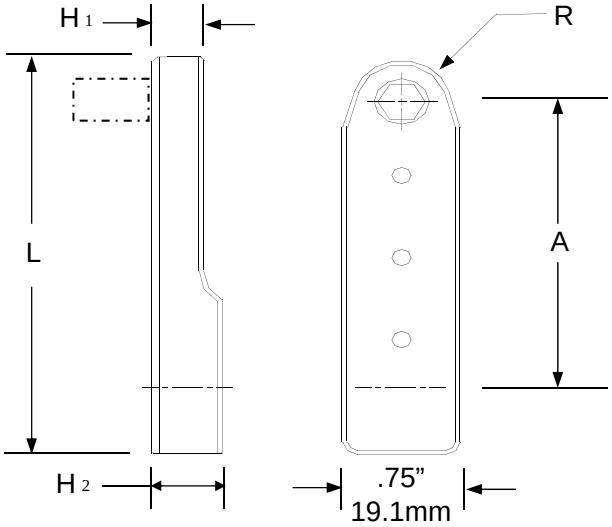

Torque Max: 80 in-lbs

Model Number	No. of Gears	A	H1	H2	L	R
CTL3421	5	2.38	.34 [8.6mm]	.46	4.18 [106.1mm]	.31 [7.9mm]

Table 1
Hex Size (Across Flats)

Code	Hex Size
219	7/32"
250	1/4"

Table 2
Ext'd.Socket Length

Code	Extension
A	Flush
B	1/4"
C	3/8"
D	1/2"

Table 3a
Key Hex Size

Code	Size
000	No Key
062	1/16"
078	5/64"

Table 3b
Aster™Key

Code	Dia.
000	No Key
AK2	-2
AK3	-3
AK3A	-3A

Example of Complete Tool Model Number:

CTL3421A 312 D 000

- 000 — Hex Key Size (Table 3a or 3b)
- D — Extended Socket Length (Table 2)
- 312 — Fastener Hex Size (Table 1)
- CTL3421A — Tool Model Number

17° Offset Lever Tools

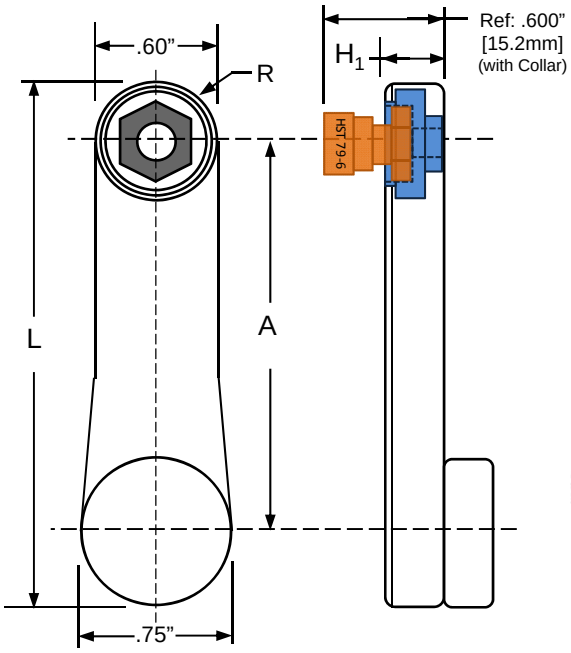

Torque Max: 90 in-lbs

Model Number	No. of Gears	A	H_1	L	R
CTL3707A	5	1.97" [50.0mm]	.285" [7.2mm]	2.65" [67.3mm]	.30" [7.6mm]
CTL3777A	7	2.97" [75.4mm]	.285" [7.2mm]	3.81" [96.8mm]	.30" [7.6mm]

Table 1
Frangible Collar
Hex Size (Across Flats)

Code	Hex Size
219	7/32"
250	1/4"
312	5/16"
343	11/32"

Table 2
Ext'd.Socket
Length

Code	Extension
A	Flush Sockets Only

Table 3
Key Hex Size

Code	Hex Size
000	NA
062	1/16"
078	5/64"

This tool model is not recommended for use with extended sockets, please select another model if an extended socket is required.

Example of Complete Tool Model Number:

CTL3707A 343 A 078

- 078 — Hex Key Size (Table 3)
- A — Extended Socket Length (Table 2)
- 343 — Fastener Hex Size (Table 1)
- CTL3707A — Tool Model Number

17° Offset Lever Tools

Torque Max: 145 in-lbs

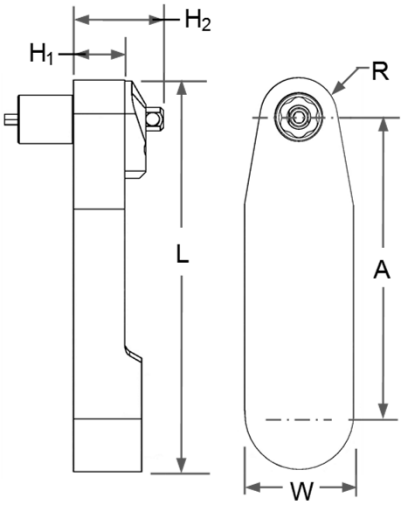

RPM at Socket: 260

Model Number	No. of Gears	A	H_1	H_2	L	W	R
CTL3439A	5	2.68" [68.1mm]	.38" [9.5mm]	.69" [17.5mm]	3.53" [89.7mm]	1.0" [25.4mm]	.35" [8.8mm]

Table 1
Frangible Collar
Hex Size (Across Flats)

Code	Hex Size
219	7/32"
250	1/4"
312	5/16"
343	11/32"
375	3/8"
437	7/16"

Table 2
Ext'd.Socket Length

Code	Extension
A *	Flush
C	0.375"
D	0.500"
E	0.625"
F	0.750"
G	1.0"
J	2.0"

Table 3
Key Hex Size

Code	Size
062	1/16" Hex Key
078	5/64" Hex Key
094	3/32" Hex Key

* Flush sockets only available in (.219, .250, .282, .312) hex sizes

Example of Complete Tool Model Number:

CTL3439A 437 D 094

- 094 — Hex Key Size (Table 3)
- D — Extended Socket Length (Table 2)
- 437 — Fastener Hex Size (Table 1)
- CTL3439A — Tool Model Number

17° Offset Lever Tools

Torque Max: 145 in-lbs

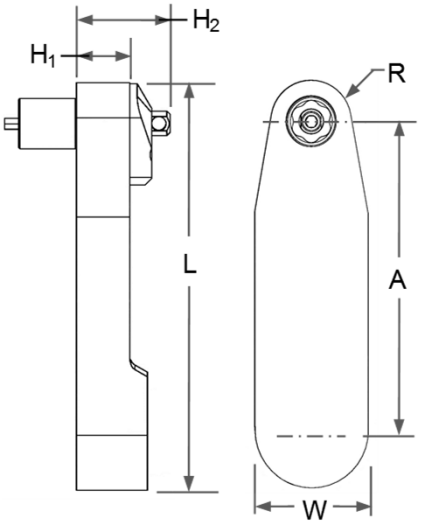

RPM at Socket: 260

Model Number	No. of Gears	A	H_1	H_2	L	W	R
CTL3452A	5	2.72" [69.1mm]	.47" [11.9mm]	.81" [20.5mm]	3.70" [94.0mm]	1.0" [25.4mm]	.39" [9.7mm]

Table 1

Collar Hex Size

Code	Dia.
219	-2
250	-3
282	-3A
312	-4

Table 2

Ext'd.Socket Length

Code	Extension
A *	Flush
C	0.375"
D	0.500"
E	0.625"
F	0.750"
G	1.0"
J	2.0"

Table 3

Key Hex Size

Code	Size
062	1/16" Hex Key
078	5/64" Hex Key
094	3/32" Hex Key

Table 3

Aster™ Key

Code	Dia.
000	No Key
AK2	-2
AK3	-3
AK3A	-3A
AK4	-4

* Flush sockets only available in (.219, .250, .223, .312) hex sizes

24P

Example of Complete Tool Model Number:

CTL3452A 312 F 094

- 094 — Hex Key or Aster™ Key Option (Table 3)
- F — Extended Socket Length (Table 2)
- 312 — Fastener Hex Size (Table 1)
- CTL3452A — Tool Model Number

17° Offset Lever Tools

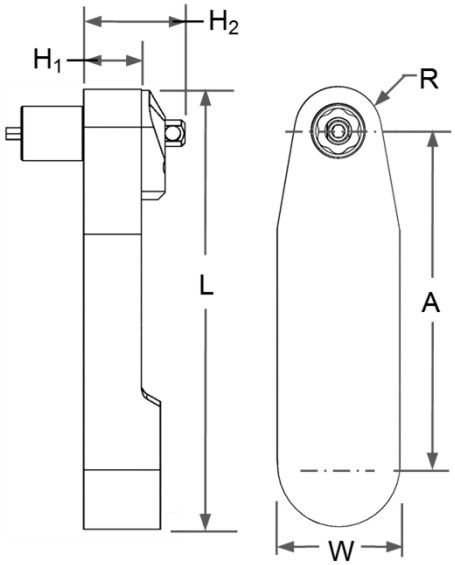

Torque Max: 150 in-lbs

RPM at Socket: 270

Model Number	No. of Gears	A	H_1	H_2	L	W	R
CTL3402A	5	2.75" [69.9mm]	.38" [9.71mm]	.73" [18.5mm]	3.68" [93.3mm]	1.0" [25.4mm]	.43" [10.8mm]

The above model tools are designed for use with a flush socket gear or extended sockets.

Table 1
Frangible Collar
Hex Size (Across Flats)

Code	Hex Size
219	7/32"
250	1/4"
312	5/16"
343	11/32"
375	3/8"
437	7/16"

Table 2
Ext'd.Socket Length

Code	Extension
A	Flush
C	0.375"
D	0.500"
E	0.625"
G	1.0"
J	2.0"

Table 3
Key Hex Size

Code	**Size**
078	5/64" Hex Key
094	3/32" Hex Key
125T	1/8" Hex Key

1/8" Hex key available on Models CT3110 and CT3111

Example of Complete Tool Model Number:

CTL3402A 343 A 078

- 078 — Hex Key Size (Table 3)
- A — Extended Socket Length (Table 2)
- 343 — Fastener Hex Size (Table 1)
- CTL3402A — Tool Model Number

17° Offset Lever Tools

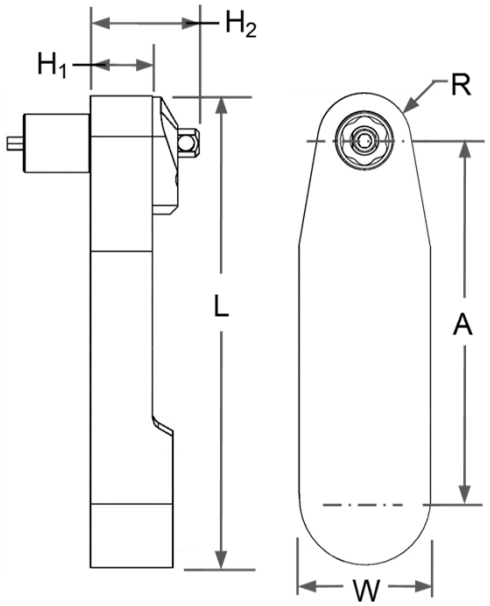

Torque Max: 150 in-lbs

RPM at Socket: 270

Model Number	No. of Gears	A	H_1	H_2	L	W	R
CTL3461A	5	2.75" [69.9mm]	.47" [11.9mm]	.81" [20.5mm]	3.68" [93.3mm]	1.0" [25.4mm]	.43" [10.8mm]

The above model tools are designed for use with a flush socket gear or extended sockets.

Table 1
Frangible Collar
Hex Size (Across Flats)

Code	Hex Size
219	7/32"
250	1/4"
312	5/16"
343	11/32"
375	3/8"
437	7/16"

Table 2
Ext'd.Socket Length

Code	Extension
A	Flush
C	0.375"
D	0.500"
E	0.625"
G	1.0"
J	2.0"

Table 3
Key Hex Size

Code	**Size**
078	5/64" Hex Key
094	3/32" Hex Key
125T	1/8" Hex Key

1/8" Hex key available on Models CT3110 and CT3111

Example of Complete Tool Model Number:

CTL3461A 343 A 078

- 078 — Hex Key Size (Table 3)
- A — Extended Socket Length (Table 2)
- 343 — Fastener Hex Size (Table 1)
- CTL3461A — Tool Model Number

17° Offset Lever Tools

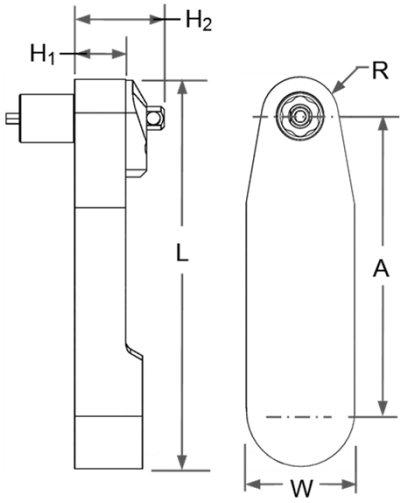

Torque Max: 150 in-lbs

RPM at Socket: 270

"Flush or Extended Socket Applications"

Model Number	No. of Gears	A	H_1	H_2	L	W	R
CTL3111A	5	2.75" [69.9mm]	.47" [11.9mm]	.78" [19.8mm]	3.68" [93.3mm]	1.0" [25.4mm]	.43" [10.8mm]

The above model tools are designed for use with a flush socket gear or extended sockets.

Table 1
Frangible Collar Hex Size (Across Flats)

Code	Hex Size
219	7/32"
250	1/4"
312	5/16"
343	11/32"
375	3/8"
437	7/16"

Table 2
Ext'd.Socket Length

Code	Extension
A	Flush
C	0.375"
D	0.500"
E	0.625"
G	1.0"
J	2.0"

Table 3
Key Hex Size

Code	Size
078T	5/64" Hex Key
094T	3/32" Hex Key
125T	1/8" Hex Key

Example of Complete Tool Model Number:

CTL3111 C 343 A 078

- 078 — Hex Key Size (Table 3)
- A — Extended Socket Length (Table 2)
- 343 — Fastener Hex Size (Table 1)
- C — Ext'd. Drive Shaft (Table 4)
- CTL3111 — Tool Model Number

17° Offset Lever Tools

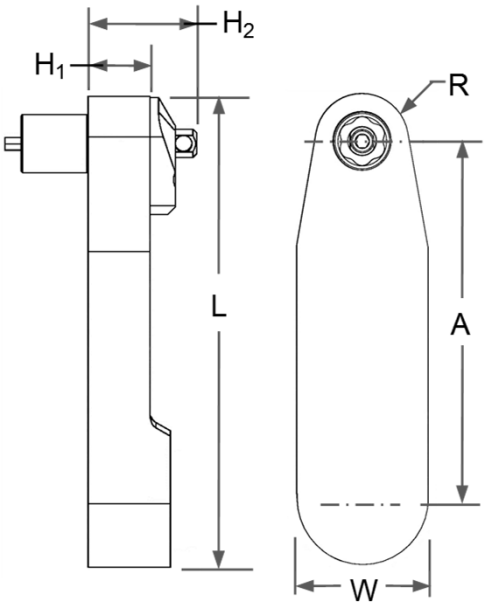

Torque Max: 230 in-lbs

Motor: LBB16S005 Mod.

RPM: 220 at socket

Model Number	No. of Gears	A	H_1	H_2 (Ref)	L	W	R
CTL3498A	5	3.19 [81.0mm]	.50 [11.4mm]	.84 [21.5mm]	4.5 [114.3mm]	1.12 [28.4mm]	.43 [10.8mm]

This is a very durable tool design for general purpose applications and is designed for use in a flush condition or with extended sockets and hex keys when required.

This gear head has 360° indexing capability.

Table 1

Frangible Collar

Hex Size (Across Flats)

Code	Hex Size
375	3/8"
437	7/16"
500	1/2"
562	9/16"

Max flush hex size is ½" A/F

Table 2

Ext'd.Socket Length

Code	Extension
A	Flush
E	0.625"
F	0.750"
G	1.0"

Table 3

Key Hex Size

Code	Size
094	3/32" Hex Key
125T	1/8" Hex Key

Example of Complete Tool Model Number:

CTL3498A 437 A 125T

- 125T — Hex Key Size (Table 3)
- A — Extended Socket Length (Table 2)
- 437 — Fastener Hex Size (Table 1)
- CTL3498A — Tool Model Number

17° Offset Lever Tools

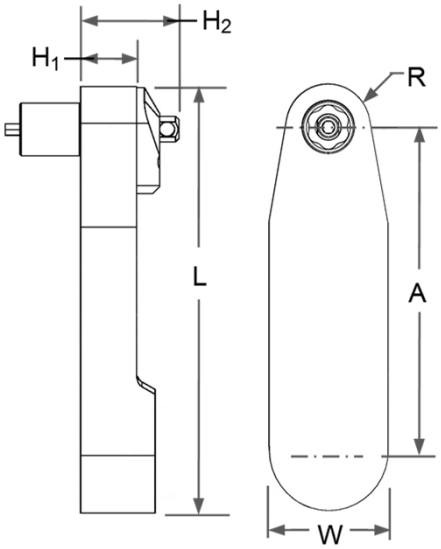

Torque Max: 270 in-lbs

Ref: LTV28N30-10

RPM at Socket: 290

Model Number	No. of Gears	A	H_1	H_2 (Ref)	L	W	R
CT3498A	5	3.19 [81.0mm]	.50 [11.4mm]	.84 [21.5mm]	4.5 [114.3mm]	1.12 [28.4mm]	.43 [10.8mm]

This is a very durable tool design for general purpose applications and is designed for use in a flush condition or with extended sockets and hex keys when required.

This gear head has 360° indexing capability.

Table 1

Frangible Collar Hex Size (Across Flats)

Code	Hex Size
375	3/8"
437	7/16"
500	1/2"
562	9/16"
625	5/8"

Table 2

Ext'd.Socket Length

Code	Extension
A	Flush
D	1/2"
E	5/8"
F	3/4"
G	1.0"

Table 3

Key Hex Size

Code	**Hex Size**
094	3/32"
125T	1/8"
156T	5/32"

Example of Complete Tool Model Number:

CT3498A 437 A 125T

- 125T — Hex Key Size (Table 3)
- A — Extended Socket Length (Table 2)
- 437 — Fastener Hex Size (Table 1)
- CT3498A — Tool Model Number

17° Offset Lever Tools

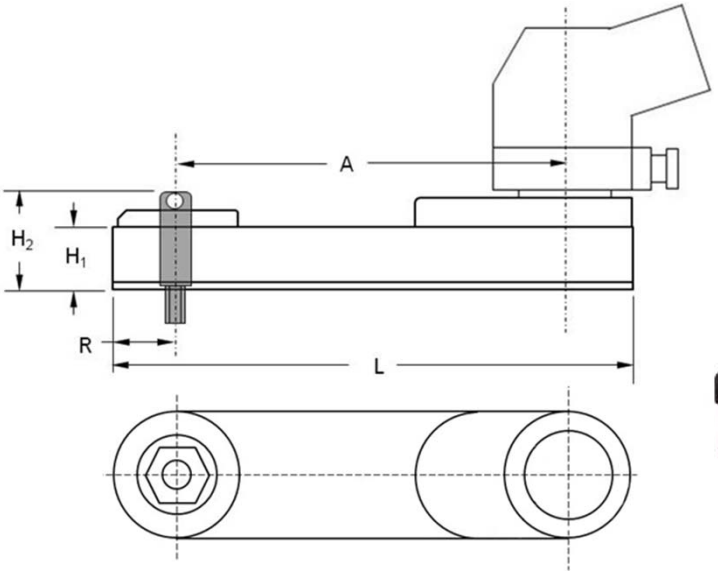

Torque Max: 310 in-lbs

Ref: LTV28N30-10 Mod.

Model Number	No. of Gears	A	H_1	H_2	L	R	W
CT3475A	5	3.23" [82.0mm]	.50" [12.7mm]	.84" [21.5mm]	4.3" [109.2mm]	.50" [12.7mm]	1.0" [25.4mm]

Table 1
Frangible Collar
Hex Size (Across Flats)

Code	Hex Size
437	7/16"
500	1/2"
562	9/16"

Table 2
Ext'd.Socket Length

Code	Extension
A	Flush
E	5/8"
G	1.0"
J	2.0"

Table 3
Key Hex Size

Code	**Size**
000	NA
125T	1/8"
156T	5/32"

.500 Max A/F Flush Socket Gear

Example of Complete Tool Model Number:

CT3475 A 375 A 125T

- 125T — Ergo Hex Key Size (Table 3)
- A — Extended Socket Length (Table 2)
- 375 — Fastener Diameter (Table 1)
- A — With 360° Index Unit
- CT3475 — Tool Model Number

17° Offset Lever Tools

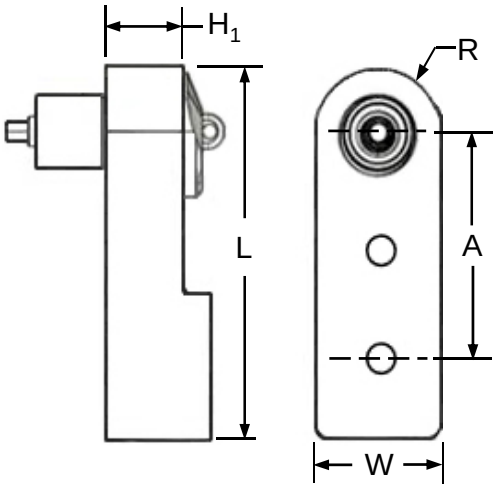

Torque Max: 320 in-lbs

LTV28N30-10

Free Speed RPM: 170

Model Number	No. of Gears	A	H_1	H_2 (Ref)	L	W	R
CTL3493A	3	1.78" [45.2mm]	.69" [17.5mm]	1.0" [25.4mm]	2.97" [70.9mm]	1.12" [28.6mm]	.59" [15.0mm]

This is a very durable tool design for general purpose applications and is designed for use in a flush condition or with extended sockets and hex keys when required.

This gear head has 360° indexing capability.

Table 1
Frangible Collar
Hex Size (Across Flats)

Code	Hex Size
437	7/16"
500	1/2"
562	9/16"
625	5/8"
687	11/16"
750	3/4"

Table 2
Ext'd.Socket Length

Code	Extension
A	Flush
E	5/8"
G	1.0"
J	2.0"

Table 3
Key Hex Size

Code	**Size**
000	NA
156T	5/32"
187T	3/16"
219T	7/32"
250T	1/4"

.687 Max A/F Flush Socket Gear

Example of Complete Tool Model Number:

CTL3493A 500 G 156T

- 156T — Hex Key Size (Table 3)
- G — Extended Socket Length (Table 2)
- 500 — Fastener Hex Size (Table 1)
- CTL3493A — Tool Model Number

17° Offset Lever Tools

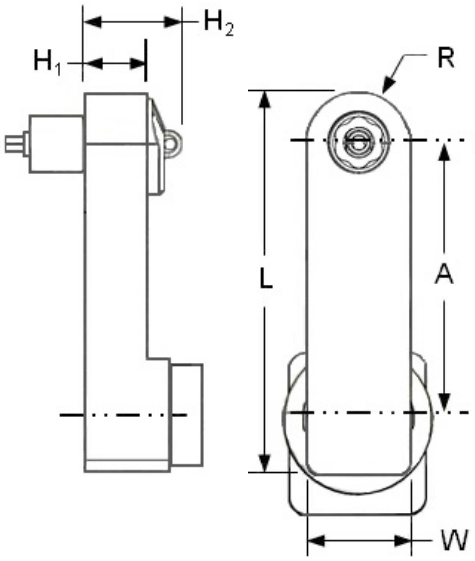

Torque Max: 320 in-lbs

Ref: LTV28N30-10 Mod.

RPM at Socket: 175

Model Number	No. of Gears	A	H_1	H_2	L	R	W
CTL3472A	5	3.0" [76.2mm]	.69" [17.5mm]	1.0" [25.4mm]	4.2" [106.4mm]	.56" [14.2mm]	1.12" [28.4mm]

Model CTL3472A is designed for use with a flush socket gear or extended sockets

Table 1
Frangible Collar
Hex Size (Across Flats)

Code	Hex Size
375	3/8"
437	7/16"
500	1/2"
562	9/16"
625	5/8"
687	11/16"

Table 2
Ext'd.Socket Length

Code	Extension
A	Flush
E	5/8"
G	1.0"
J	2.0"

Table 3
Key Hex Size

Code	**Size**
000	NA
125T	1/8"
156T	5/32"
187T	3/16"
219T	7/32"
250T	1/4"

.687 Max A/F Flush Socket Gear

Example of Complete Tool Model Number:

CTL3472 A 625 D 156T

- 156T — Ergo Hex Key Size (Table 3)
- D — Extended Socket Length (Table 2)
- 625 — Fastener Diameter (Table 1)
- A — With 360° Index Unit
- CTL3472 — Tool Model Number

17° Offset Lever Tools

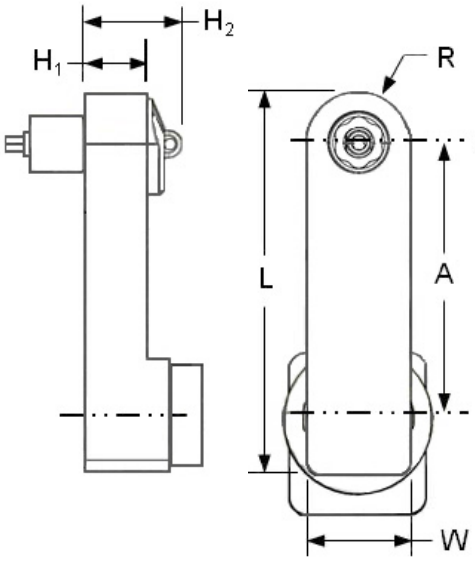

Torque Max: 320 in-lbs

Ref: LTV28N30-10 Mod.

RPM at Socket: 175

Model Number	No. of Gears	A	H_1	H_2	L	R	W
CTL3720A	5	3.0" [76.2mm]	.69" [17.5mm]	1.0" [25.4mm]	4.2" [106.4mm]	.56" [14.2mm]	1.12" [28.4mm]

Model CTL3720A is designed for use with a flush socket gear or extended sockets

Table 1
Frangible Collar
Hex Size (Across Flats)

Code	Hex Size
375	3/8"
437	7/16"
500	1/2"
562	9/16"
625	5/8"
687	11/16"

.687 Max A/F Flush Socket Gear

Table 2
Ext'd.Socket Length

Code	Extension
A	Flush
E	5/8"
G	1.0"
J	2.0"

Table 3
Key Hex Size

Code	**Size**
000	NA
125T	1/8"
156T	5/32"
187T	3/16"
219T	7/32"
250T	1/4"

Example of Complete Tool Model Number:

CTL3720 A 625 D 156T

- 156T — Ergo Hex Key Size (Table 3)
- D — Extended Socket Length (Table 2)
- 625 — Fastener Diameter (Table 1)
- A — With 360° Index Unit
- CTL3720 — Tool Model Number

17° Offset Lever Tools

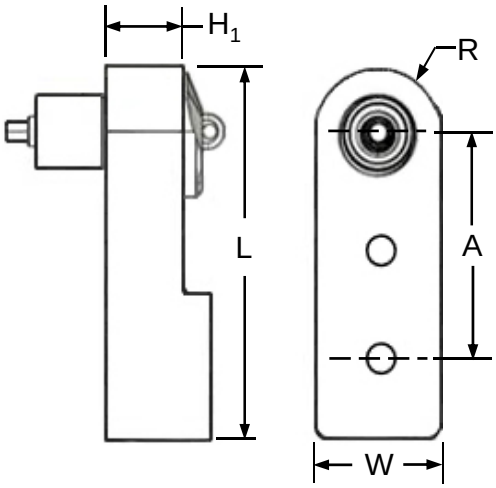

Torque Max: 500 in-lbs

LTV38N68-13
Atlas Motor Required

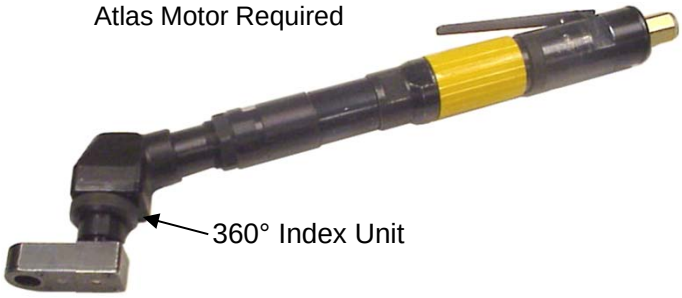

Free Speed RPM: 170

Model Number	No. of Gears	A	H_1	H_2 (Ref)	L	W	R
CT3493A	3	1.78" [45.2mm]	.69" [17.5mm]	1.0" [25.4mm]	2.97" [70.9mm]	1.12" [28.6mm]	.59" [15.0mm]

This is a very durable tool design for general purpose applications and is designed for use in a flush condition or with extended sockets and hex keys when required.

This gear head has 360° indexing capability.

Table 1
Frangible Collar
Hex Size (Across Flats)

Code	Hex Size
437	7/16"
500	1/2"
562	9/16"
625	5/8"
687	11/16"
750	3/4"

Table 2
Ext'd.Socket Length

Code	Extension
A	Flush
E	5/8"
G	1.0"
J	2.0"

Table 3
Key Hex Size

Code	Size
000	NA
156T	5/32"
187T	3/16"
219T	7/32"
250T	1/4"

.687 Max A/F Flush Socket Gear

Example of Complete Tool Model Number:

CT3493A 500 G 156T

- 156T — Hex Key Size (Table 3)
- G — Extended Socket Length (Table 2)
- 500 — Fastener Hex Size (Table 1)
- CT3493A — Tool Model Number

17° Offset Lever Tools

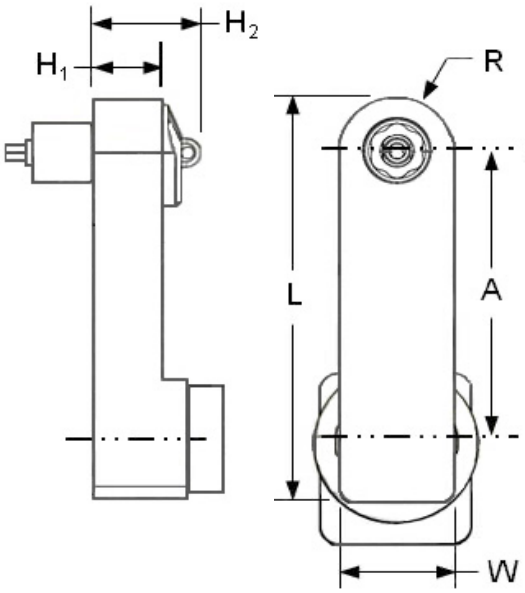

Torque Max: 520 in-lbs

Ref: LTV38N68-13 Mod.

RPM at Socket: 100

Model Number	No. of Gears	A	H_1	H_2 (Ref)	L	W	R
CT3472A	5	3.00" [76.2mm]	.69" [17.5mm]	1.0" [25.4mm]	4.2" [106.4mm]	1.12" [28.4mm]	.56" [14.2mm]

Table 1
Frangible Collar
Hex Size (Across Flats)

Code	Hex Size
437	7/16"
500	1/2"
562	9/16"
625	5/8"
687	11/16"
750	3/4"

Table 2
Ext'd.Socket Length

Code	Extension
A	Flush
E	5/8"
G	1.0"
J	2.0"

Table 3
Key Hex Size

Code	**Size**
000	NA
125T	1/8"
156T	5/32"
187T	3/16"
219T	7/32"
250T	1/4"

.687 Max A/F Flush Socket Gear

Example of Complete Tool Model Number:

CT3472 A 625 D 156T

- 156T — Ergo Hex Key Size (Table 3)
- D — Extended Socket Length (Table 2)
- 625 — Fastener Diameter (Table 1)
- A — With 360° Index Unit
- CT3472 — Tool Model Number

17° Offset Lever Tools

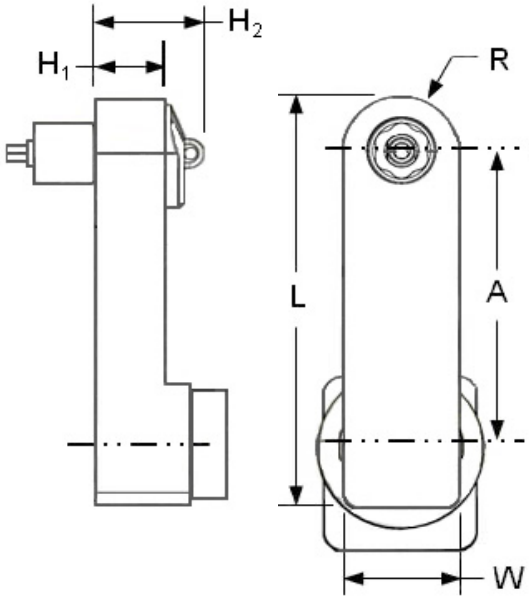

Torque Max: 400 in-lbs

RPM at Socket: 100

Model Number	No. of Gears	A	H_1	H_2 (Ref)	L	W	R
CT3720A	7	3.69" [93.6mm]	.69" [17.5mm]	1.0" [25.4mm]	4.88" [124.0mm]	1.12" [28.4mm]	.59" [15.0mm]

Model CT3720A is designed for use with a flush socket gear or extended sockets

Table 1
Frangible Collar
Hex Size (Across Flats)

Code	Hex Size
437	7/16"
500	1/2"
562	9/16"
625	5/8"
687	11/16"
750	3/4"

Table 2
Ext'd.Socket Length

Code	Extension
A	Flush
E	5/8"
G	1.0"
J	2.0"

Table 3
Key Hex Size

Code	**Size**
000	NA
125T	1/8"
156T	5/32"
187T	3/16"
219T	7/32"
250T	1/4"

.687 Max A/F Flush Socket Gear

Example of Complete Tool Model Number:

CT3720 A 562 F 187T

- 187T — Ergo Hex Key Size (Table 3)
- F — Extended Socket Length (Table 2)
- 562 — Fastener Diameter (Table 1)
- A — With 360° Index Unit
- CT3720 — Tool Model Number

90° Offset Power Tools

SECTION 3

90° Offset Lever Tools

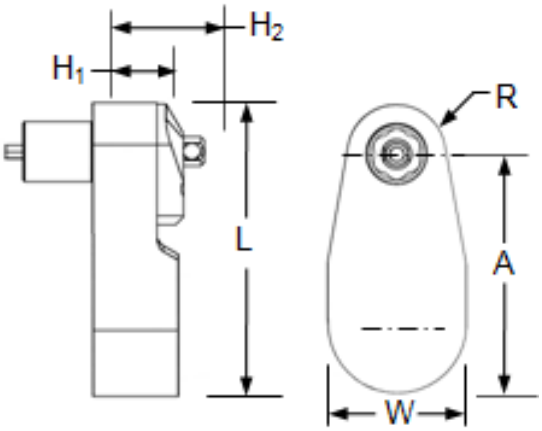

Torque Max: 140 in-lbs

250 RPM at Socket

Model Number	No. of Gears	A	H_1	H_2	L	W	R
CTL5428A	3	1.25" [31.8mm]	.47" [11.9mm]	.81" [20.5mm]	2.1" [53.3mm]	1.0" [25.4mm]	.35" [8.8mm]

This is a very durable tool design for general purpose applications and is designed for use in a flush condition or with extended sockets and hex keys when required.

This gear head has 360° indexing capability.

Table 1
Frangible Collar
Hex Size (Across Flats)

Code	Hex Size
219	7/32"
250	1/4"
282	9/32"
312	5/16"
343	11/32"
375	3/8"
437	7/16"

Table 2
Ext'd.Socket Length

Code	Extension
A*	Flush
C	0.375"
D	0.500"
E	0.625"
F	0.750"
G	1.0"
J	2.0"

Table 3
Key Hex Size

Code	Size	Hex Key P/N
062T	1/16" 2-Pc Hex Key	093-9337
078T	5/64" 2-Pc Hex Key	093-9334
094T	3/32" 2-Pc Hex Key	093-9333

062	1/16" 1-Pc Hex Key	Depends on socket length
078	5/64" 1-Pc Hex Key	
094	3/32" 1-Pc Hex Key	

* Flush sockets only available in (.219, .250, .282, .312) hex sizes

24P

Example of Complete Tool Model Number:

CTL5428A 250 C 078

- 078 — Hex Key Size (Table 3)
- C — Extended Socket Length (Table 2)
- 250 — Fastener Hex Size (Table 1)
- CTL5428A — Tool Model Number

90º Offset Lever Tools

Torque Max: 145 in-lbs

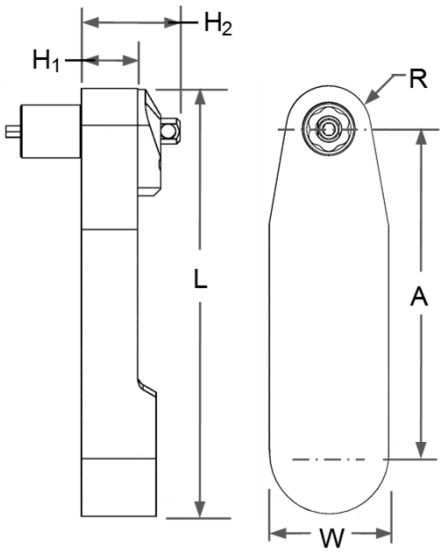

RPM at Socket: 260

Model Number	No. of Gears	A	H_1	H_2	L	W	R
CTL5439A	5	2.68" [68.1mm]	.38" [9.5mm]	.69" [17.5mm]	3.53" [89.7mm]	1.0" [25.4mm]	.35" [8.8mm]

Table 1
Frangible Collar
Hex Size (Across Flats)

Code	Hex Size
219	7/32"
250	1/4"
312	5/16"
343	11/32"
375	3/8"
437	7/16"

Table 2
Ext'd.Socket Length

Code	Extension
A *	Flush
C	0.375"
D	0.500"
E	0.625"
F	0.750"
G	1.0"
J	2.0"

Table 3
Key Hex Size

Code	Size
062	1/16" Hex Key
078	5/64" Hex Key
094	3/32" Hex Key

* Flush sockets only available in (.219, .250, .282, .312) hex sizes

Example of Complete Tool Model Number:

CTL5439A 437 D 094

- 094 — Hex Key Size (Table 3)
- D — Extended Socket Length (Table 2)
- 437 — Fastener Hex Size (Table 1)
- CTL5439A — Tool Model Number

90° Offset Lever Tools

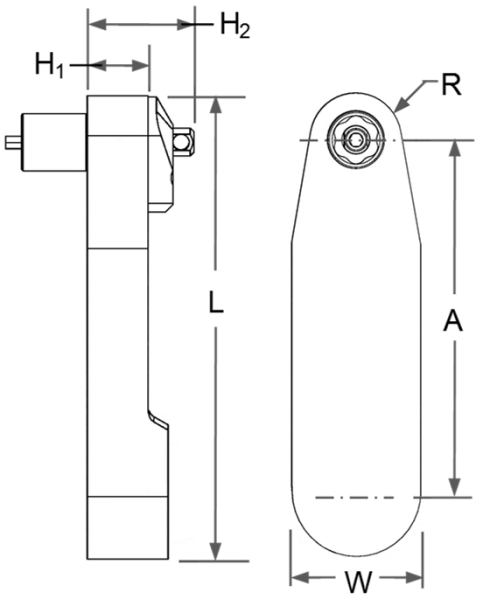

Torque Max: 140 in-lbs

Model Number	No. of Gears	A	H_1	H_2	L	W	R
CTL5429A	5	2.68" [68.1mm]	.47" [11.9mm]	.81" [20.5mm]	3.53" [89.7mm]	1.0" [25.4mm]	.35" [8.8mm]

Table 1
Frangible Collar
Hex Size (Across Flats)

Code	Hex Size
219	7/32"
250	1/4"
282	9/32"
312	5/16"
343	11/32"
375	3/8"
437	7/16"

Table 2
Ext'd.Socket Length

Code	Extension
A*	Flush
C	0.375"
D	0.500"
E	0.625"
F	0.750"
G	1.0"
J	2.0"

Table 3
Key Hex Size

Code	Size
062	1/16" Hex Key
078	5/64" Hex Key
094	3/32" Hex Key

* Flush sockets only available in (.219, .250, .282, .312) hex sizes

24P

Example of Complete Tool Model Number:

CTL5429A 437 F 094

- 094 — Hex Key Size (Table 3)
- F — Extended Socket Length (Table 2)
- 437 — Fastener Hex Size (Table 1)
- CTL5429A — Tool Model Number

90° Offset Lever Tools

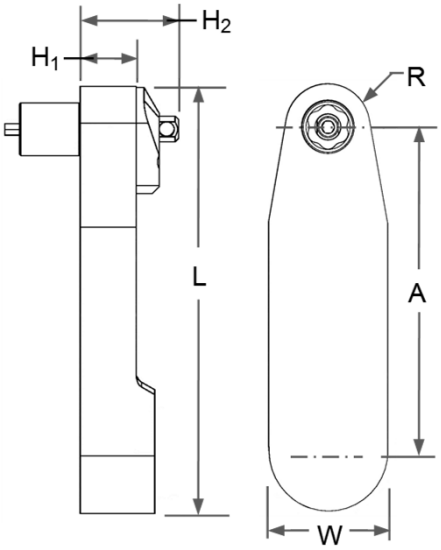

150 in lbs Max.

Model Number	No. of Gears	A	H_1	H_2	L	R
CTL5461A	5	2.75 [69.9mm]	.47 [11.9mm]	.61 [15.4mm]	3.68 [93.3mm]	.43 [10.8mm]

This is a very durable tool design for general purpose applications and is designed for use in a flush condition or with extended sockets and hex keys when required.

This gear head has 360° indexing capability.

Table 1
Frangible Collar
Hex Size (Across Flats)

Code	Hex Size
219	7/32"
250	1/4"
282	9/32"
312	5/16"
343	11/32"
375	3/8"
437	7/16"

Table 2
Ext'd.Socket Length

Code	Extension
A*	Flush
C	0.375"
D	0.500"
E	0.625"
F	0.750"
G	1.0"
J	2.0"

Table 3
Key Hex Size

Code	Size
062	1/16" Hex Key
078	5/64" Hex Key
094	3/32" Hex Key
125T	1/8" Hex Key

* Flush sockets only available in (.219, .250, .282, .312) hex sizes

Example of Complete Tool Model Number:

CTL5461A 312 C 078

- 078 — Hex Key Size (Table 3)
- C — Extended Socket Length (Table 2)
- 312 — Fastener Hex Size (Table 1)
- CTL5461A — Tool Model Number

90° Offset Lever Tools

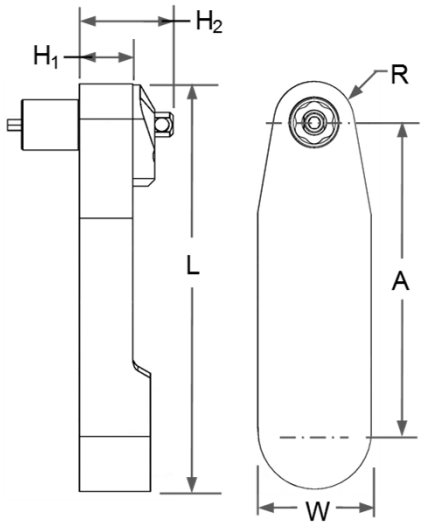

150 in lbs Max.

Model Number	No. of Gears	A	H_1	H_2	L	R
CTL5111A	5	2.75 [69.9mm]	.47 [11.9mm]	.61 [15.4mm]	3.68 [93.3mm]	.43 [10.8mm]

This is a very durable tool design for general purpose applications and is designed for use in a flush condition or with extended sockets and hex keys when required.
This gear head has 360° indexing capability.

Table 1
Frangible Collar
Hex Size (Across Flats)

Code	Hex Size
219	7/32"
250	1/4"
282	9/32"
312	5/16"
343	11/32"
375	3/8"
437	7/16"

Table 2
Ext'd.Socket Length

Code	Extension
A*	Flush
C	0.375"
D	0.500"
E	0.625"
F	0.750"
G	1.0"
J	2.0"

Table 3
Key Hex Size

Code	Size
062T	1/16" Hex Key
078T	5/64" Hex Key
094T	3/32" Hex Key
125T	1/8" Hex Key

* Flush sockets only available in (.219, .250, .282, .312) hex sizes

24P

Example of Complete Tool Model Number:

CTL5111 C 343 A 078

- 078 — Hex Key Size (Table 3)
- A — Extended Socket Length (Table 2)
- 343 — Fastener Hex Size (Table 1)
- C — Ext'd. Drive Shaft (Table 4)
- CTL5111 — Tool Model Number

90º Offset Lever Tools

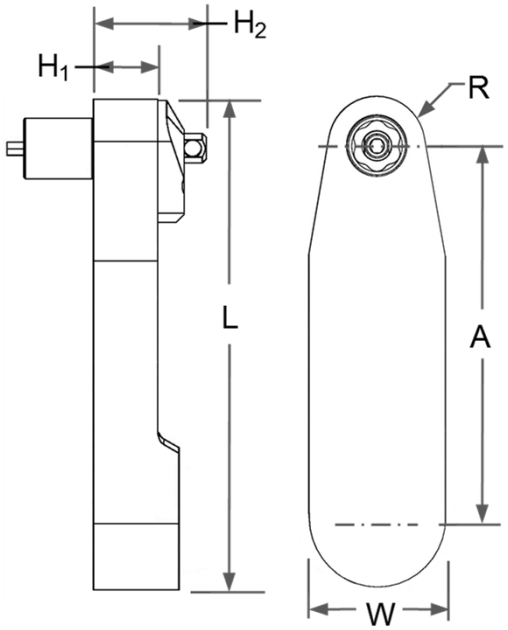

Torque Max: 140 in-lbs

Model Number	No. of Gears	A	H_1	H_2	L	W	R
CTL5438	7	4.13" [104.9mm]	.47" [11.9mm]	.81" [20.5mm]	4.98" [126.5mm]	1.0" [25.4mm]	.35" [8.8mm]

Table 1
Frangible Collar
Hex Size (Across Flats)

Code	Hex Size
219	7/32"
250	1/4"
282	9/32"
312	5/16"
343	11/32"
375	3/8"
437	7/16"

Table 2
Ext'd.Socket Length

Code	Extension
A*	Flush
C	0.375"
D	0.500"
E	0.625"
F	0.750"
G	1.0"
J	2.0"

Table 3
Key Hex Size

Code	Size
062	1/16" Hex Key
078	5/64" Hex Key
094	3/32" Hex Key

* Flush sockets only available in (.219, .250, .282, .312) hex sizes

Example of Complete Tool Model Number:

CTL5438A 437 F 094

- 094 — Hex Key Size (Table 3)
- F — Extended Socket Length (Table 2)
- 437 — Fastener Hex Size (Table 1)
- CTL5438A — Tool Model Number

90° Offset Lever Tools

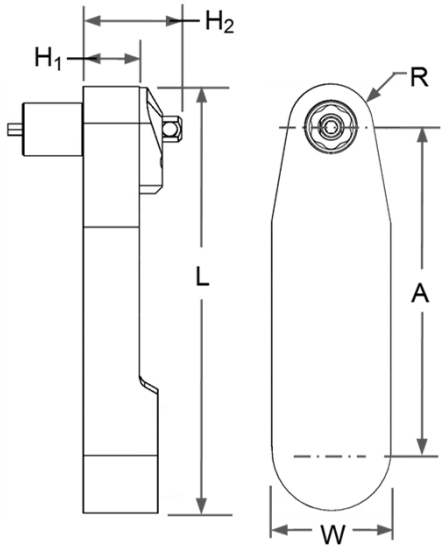

220 in lbs Max.

Model Number	No. of Gears	A	H_1	H_2	L	W	R
CTL5498A	5	3.19" [81.0mm]	.50" [12.7mm]	.84" [21.5mm]	4.5" [114.3mm]	1.12" [28.4mm]	.43" [10.8mm]

This is a very durable tool design for general purpose applications and is designed for use in a flush condition or with extended sockets and hex keys when required.

This gear head has 360° indexing capability.

Table 1

Frangible Collar Hex Size (Across Flats)

Code	Hex Size
375	3/8"
437	7/16"
500	1/2"
562	9/16"

Table 2

Ext'd.Socket Length

Code	Extension
A	Flush
D	0.500"
E	0.625"
F	0.750"
G	1.0"

Table 3

Key Hex Size

Code	Size
094	3/32" Hex Key
125T	1/8" Hex Key
156T	5/32" Hex Key

Example of Complete Tool Model Number:

CTL5498A 375 E 125T

- 125T — Hex Key Size (Table 3)
- E — Extended Socket Length (Table 2)
- 375 — Fastener Hex Size (Table 1)
- CTL5498A — Tool Model Number

90º Offset Lever Tools

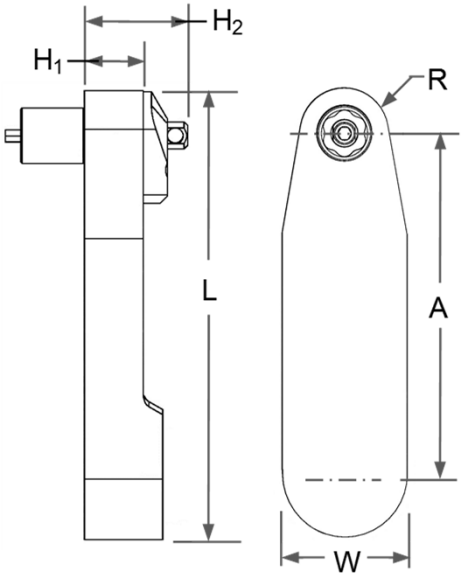

260 in lbs Max.

Ref: LTV28N30 Series

Model Number	No. of Gears	A	H1	H2 (Ref)	L	W	R
CT5498A	5	3.19 [81.0mm]	.50 [12.7mm]	.84" [21.5mm]	4.5 [114.3mm]	1.12 [28.4mm]	.43 [10.8mm]

This is a very durable tool design for general purpose applications and is designed for use in a flush condition or with extended sockets and hex keys when required.

This gear head has 360° indexing capability.

Table 1

Frangible Collar

Hex Size (Across Flats)

Code	Hex Size
375	3/8"
437	7/16"
500	1/2"
562	9/16"

Table 2

Ext'd.Socket Length

Code	Extension
A	Flush
D	0.500"
E	0.625"
F	0.750"
G	1.0"

Table 3

Key Hex Size

Code	Size
094	3/32" Hex Key
125T	1/8" Hex Key
156T	5/32" Hex Key

Example of Complete Tool Model Number:

CT5498A 475 G 125T

- 125T — Hex Key Size (Table 3)
- G — Extended Socket Length (Table 2)
- 475 — Fastener Hex Size (Table 1)
- CT5498A — Tool Model Number

90° Offset Lever Tools

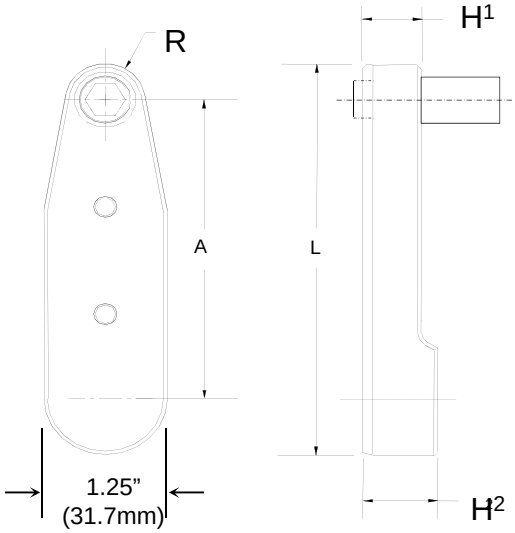

Torque: 260 in-lbs

Ref: LTV28N30 Series

Model Number	No. of Gears	A	H_1	H_2	L	R
CT5478	4	2.35 [59.6mm]	.50 [12.7mm]	.65 [16.7mm]	3.7 [92.8mm]	.437 [11.1mm]

This is a very durable tool design for general purpose applications and is designed for use in a flush condition or with extended sockets and hex keys when required.

This gear head has 360° indexing capability.

Table 1

Frangible Collar

Hex Size (Across Flats)

Code	Hex Size
375	3/8"
437	7/16"
500	1/2"
562	9/16"

Table 2

Ext'd.Socket Length

Code	Extension
A	Flush
D	0.500"
E	0.625"
F	0.750"
G	1.0"

Table 3

Key Hex Size

Code	**Size**
094	3/32" Hex Key
125T	1/8" Hex Key
156T	5/32" Hex Key

Example of Complete Tool Model Number:

CT5478X 437 E 125T

- 125T — Hex Key Size (Table 3)
- E — Extended Socket Length (Table 2)
- 437 — Fastener Hex Size (Table 1)
- CT5478X — Tool Model Number

90º Offset Lever Tools

130 in lbs Max

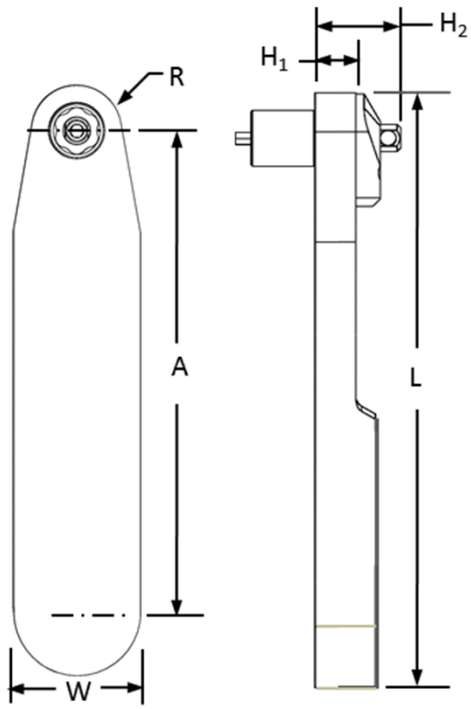

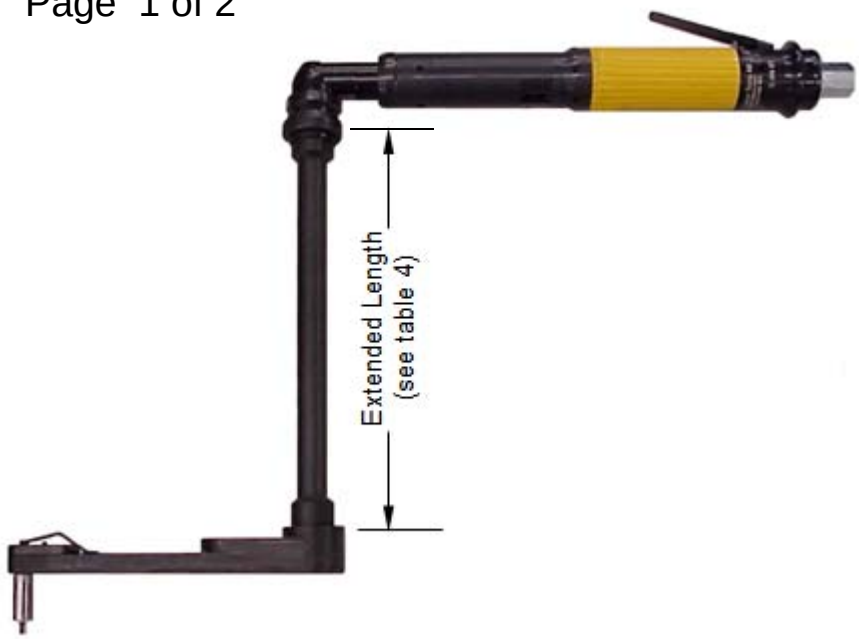

Model Number	No. of Gears	A	H_1	H_2	L	R	W (Front)
CT5705	9	6.59" [167.4mm]	.43" [10.9mm]	.73" [18.5mm]	7.6" [193mm]	.35" [8.9mm]	1.0" [25.4mm]

Table 1
Frangible Collar Hex Size (Across Flats)

Code	Hex Size
219	7/32"
250	1/4"
312	5/16"
343	11/32"
375	3/8"
437	7/16"

Table 2
Ext'd.Socket Length

Code	Extension
A	Flush
C	3/8"
D	1/2"
E	5/8"
G	1.0"
J	2.0"

Table 3
Key Hex Size

Code	**Size**
078	5/64" Hex Key
094	3/32" Hex Key

Table 4
Extended Drive Shaft with 360º Index Capability

Code	Extension
A	1-1/2"
E	4.0"
G	6.0"
K	12.0"

Example of Complete Tool Model Number:

CT5705 G 437 F 094

- 094 — Hex Key Size (Table 3)
- F — Extended Socket Length (Table 2)
- 437 — Fastener Hex Size (Table 1)
- G — Ext'd Drive Shaft-Index (Table 4)
- CT5705 — Tool Model Number

90º Offset Lever Tools

300 in-lbs

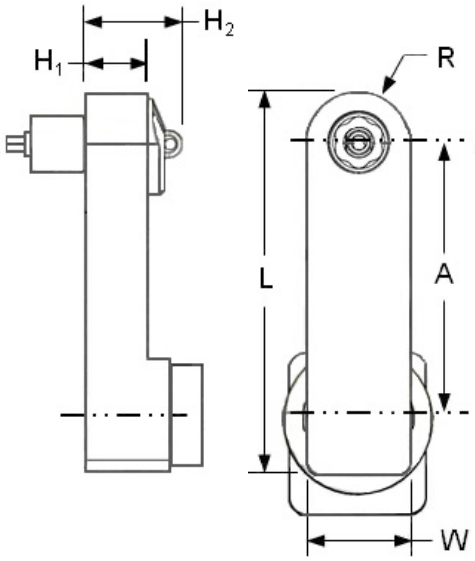

Ref: LTV28N28-10

RPM at Socket: 270

Model Number	No. of Gears	A	H_1	H_2	L	R	W
CTL5472A	5	3.0" [76.2mm]	.69" [17.5mm]	1.0" [25.4mm]	4.19" [106.4mm]	.56" [14.2mm]	1.12" [28.4mm]

This is a very durable tool design for general purpose applications and is designed for Use in a flush condition or with extended sockets and hex keys when required. This gear head has 360° indexing capability.

Table 1
Frangible Collar
Hex Size (Across Flats)

Code	Hex Size
375	3/8"
437	7/16"
500	1/2"
562	9/16"
625	5/8"
687	11/16"

.687 Max A/F Flush Socket Gear

Table 2
Ext'd.Socket Length

Code	Extension
A	Flush
E	5/8"
G	1.0"
J	2.0"

Table 3
Key Hex Size

Code	Size
000	NA
125T	1/8"
156T	5/32"
187T	3/16"
219T	7/32"
250T	1/4"

Example of Complete Tool Model Number:

CTL5472A 437 E 156T

- 156T — Hex Key Size (Table 3)
- E — Extended Socket Length (Table 2)
- 437 — Fastener Hex Size (Table 1)
- CTL5472A — Tool Model Number

ARCONIC

90º Offset Lever Tools

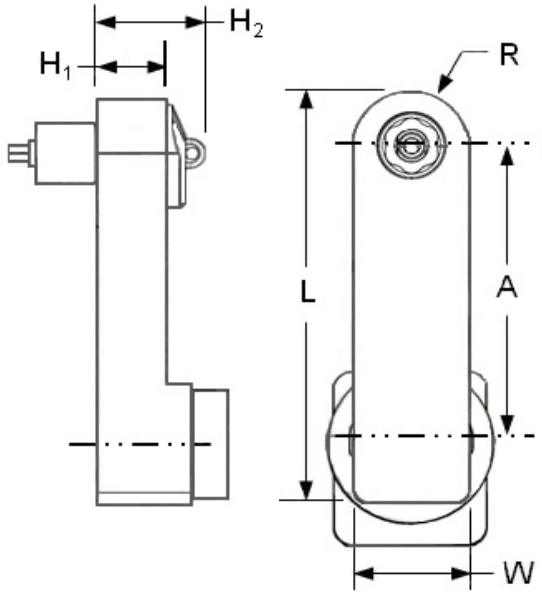

520 in-lbs

Ref: LTV38N68-13

RPM at Socket: 270

Model Number	No. of Gears	A	H_1	H_2	L	R	W
CT5472A	5	3.0" [76.2mm]	.69" [17.5mm]	1.0" [25.4mm]	4.19" [106.4mm]	.56" [14.2mm]	1.12" [28.4mm]

This is a very durable tool design for general purpose applications and is designed for Use in a flush condition or with extended sockets and hex keys when required.

This gear head has 360° indexing capability.

Table 1
Frangible Collar
Hex Size (Across Flats)

Code	Hex Size
375	3/8"
437	7/16"
500	1/2"
562	9/16"
625	5/8"
687	11/16"

Table 2
Ext'd.Socket Length

Code	Extension
A	Flush
E	5/8"
G	1.0"
J	2.0"

Table 3
Key Hex Size

Code	**Size**
000	NA
125T	1/8"
156T	5/32"
187T	3/16"
219T	7/32"
250T	1/4"

.687 Max A/F Flush Socket Gear

Example of Complete Tool Model Number:

CT5472A 437 E 156T

- 156T — Hex Key Size (Table 3)
- E — Extended Socket Length (Table 2)
- 437 — Fastener Hex Size (Table 1)
- CT5472A — Tool Model Number

90º Offset Lever Tools

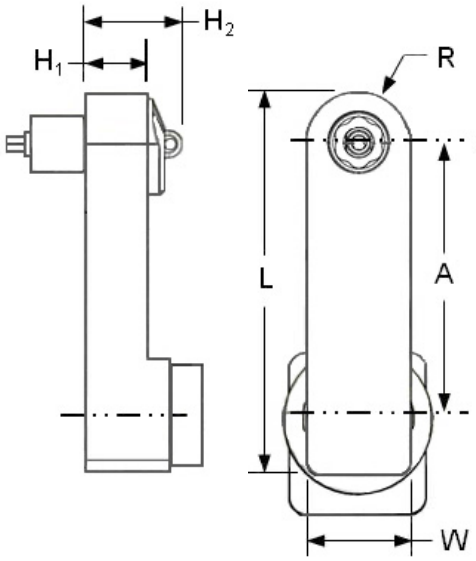

450 in-lbs

Ref: LTV38N68-13

RPM at Socket: 290

Model Number	No. of Gears	A	H_1	H_2	L	W	R
CT5720A	7	3.69" [93.6mm]	.69" [17.5mm]	1.0" [25.4mm]	4.88" [124.0mm]	1.12" [28.4mm]	.56" [14.2mm]

This is a very durable tool design for general purpose applications and is designed for Use in a flush condition or with extended sockets and hex keys when required. This gear head has 360° indexing capability.

Table 1
Frangible Collar
Hex Size (Across Flats)

Code	Hex Size
437	7/16"
500	1/2"
562	9/16"
625	5/8"

Table 2
Ext'd.Socket Length

Code	Extension
A	Flush
E	5/8"
G	1.0"
J	2.0"

Table 3
Key Hex Size

Code	**Size**
000	NA
156T	5/32"
187T	3/16"

.625 Max A/F Flush Socket Gear

Example of Complete Tool Model Number:

CT5720A 500 A 156T

- 156T — Hex Key Size (Table 3)
- A — Extended Socket Length (Table 2)
- 500 — Fastener Hex Size (Table 1)
- CT5720A — Tool Model Number

90º Offset Lever Tools

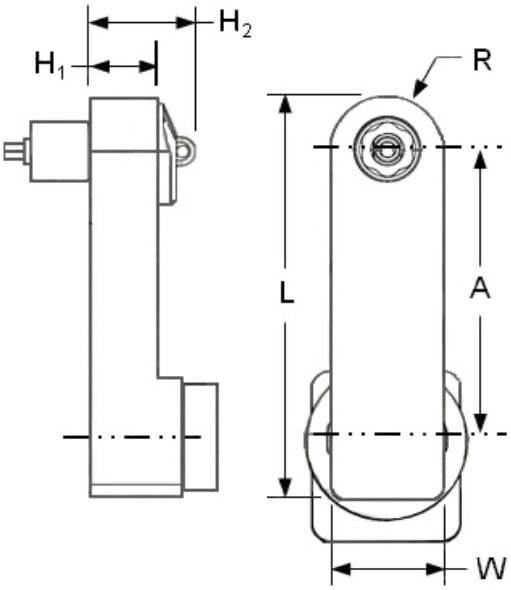

600 in-lbs

LTV38N68 Atlas Motor Required

RPM at Socket: 240

Model Number	No. of Gears	A	H_1	H_2	L	W	R
CT5463A	5	3.19" [81.0mm]	.69" [17.6mm]	1.0" [26.3mm]	4.44" [112.8mm]	1.37" [34.9mm]	.68" [17.3mm]

This is a very durable tool design for general purpose applications and is designed for use in a flush condition or with extended sockets and hex keys when required.

This gear head has 360° indexing capability.

Table 1
Frangible Collar
Hex Size (Across Flats)

Code	Hex Size
437	7/16"
500	1/2"
562	9/16"
625	5/8"
687	11/16"
750	3/4"

Table 2
Ext'd.Socket Length

Code	Extension
A	Flush
E	5/8"
G	1.0"
J	2.0"

Table 3
Key Hex Size

Code	**Size**
000	NA
125T	1/8"
156T	5/32"
187T	3/16"
219T	7/32"
250T	1/4"

.687 Max A/F Flush Socket Gear

Example of Complete Tool Model Number:

CT5463A 750 G 187T

- 187T — Hex Key Size (Table 3)
- G — Extended Socket Length (Table 2)
- 750 — Fastener Hex Size (Table 1)
- CT5463A — Tool Model Number

90º Offset Lever Tools

Torque Max: 840 in-lbs

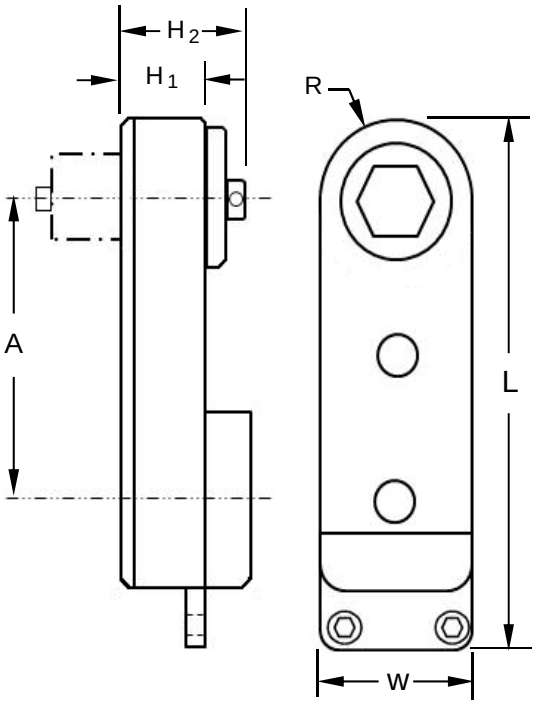

Pictured Tool is a Simulation of actual tool model

Model Number	No. of Gears	A	H_1	H_2	L	W	R
CT5605	3	2.18" [55.25mm]	.77" [19.5mm]	1.12" [28.4mm]	4.55" [115.57mm]	1.38" [35.1mm]	.69" [17.5mm]

Table 1
Frangible Collar
Hex Size (Across Flats)

Code	Hex Size
562	9/16"
625	5/8"
687	11/16"
750	3/4"
875	7/8"

Table 2
Ext'd.Socket Length

Code	Extension
A	Flush
E	5/8"
G	1.0"
H	1.5"
J	2.0"

Table 3
Key Hex Size

Code	Size
000	NA
156T	5/32"
187T	3/16"
219T	7/32"
250T	1/4"

.626 Max A/F Flush Socket Gear

Example of Complete Tool Model Number:

CT(D)5605A 625 A 187T

- 187T — Aster™ Key Size (Table 3)
- A — Extended Socket Length (Table 2)
- 625 — Fastener Hex Size (Table 1)
- CT(D)5605A — Tool Model Number

90º Offset Lever Tools

Torque Max: 1290 in-lbs

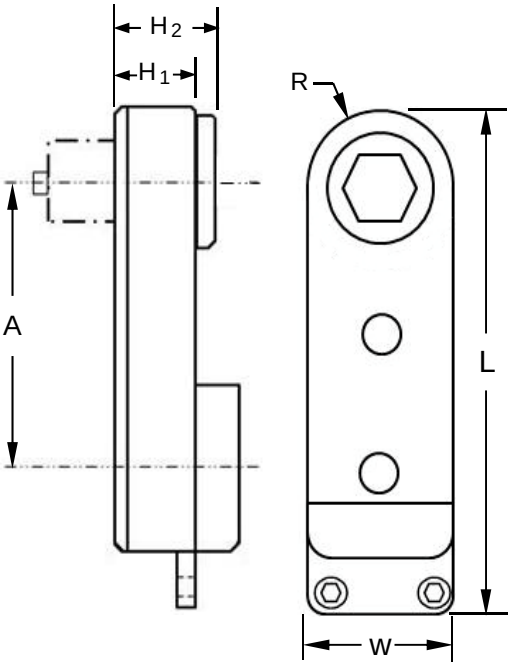

Pictured Tool is a Simulation of actual tool model

Head Only

Model Number	No. of Gears	A	H_1	H_2	L	W	R
CT5723B	3	2.88" [73.2mm]	1.0" [25.4mm]	1.18" [29.9mm]	4.85" [123.2mm]	1.80" [45.7mm]	.90" [22.8mm]

Table 1
Frangible Collar
Hex Size (Across Flats)

Code	Hex Size
750	3/4"
875	7/8"
937	15/16"

Table 2
Ext'd.Socket Length

Code	Extension
A	Flush
E	5/8"
G	1.0"
H	1.5"
J	2.0"

Table 3
Key Hex Size

Code	Size
000	NA
219T	7/32"
250T	1/4"

.626 Max A/F Flush Socket Gear

Example of Complete Tool Model Number:

CT5723B 750 F 219T

- 219T — Hex or Aster™ Key Size (Table 3a or 3b)
- F — Extended Socket Length (Table 2)
- 750 — Fastener Hex Size (Table 1)
- CT5723B — Tool Model Number

90° Right Angle Power Tools

SECTION 4

90º Angle Head Tools

Max Torque 220 in-lbs

RPM at Socket: 275

Model Number	L	H	Center to Side Angle Head	Weight
CT310AA	9.6" [243mm]	1.5" [36.6mm]	0.53" [13.5mm]	1.9 lbs [0.88 kg]

Table 1
Frangible Collar
Hex Size (Across Flats)

Code	Hex Size
219	7/32"
250	1/4"
282	9/32"
312	5/16"
343	11/32"
375	3/8"
437	7/16"

Table 2
Ext'd.Socket Length

Code	Extension
F	0.750"
G	1.0"
J	2.0"
L	3.0"

Table 3
Key Hex Size

Code	Size
062T	1/16" Hex Key
078T	5/64" Hex Key
094T	3/32" Hex Key

Example of Complete Tool Model Number:

CT310AA 312 J 078T

- 078T — Hex Key Size (Table 3)
- J — Extended Socket Length (Table 2)
- 312 — Fastener Hex Size (Table 1)
- CT310AA — Tool Model Number

90º Angle Head Tools

Table 1

Tool Model Number	Max Torque (in-lbs)	Max Torque Nm	RPM	Hex Socket Sizes (A/F)								Hex Key Sizes		
CT310AA	220	15	275	7/32	1/4	9/32	5/16	11/32				.062	.078	.094
CT310AB	265	30	400	5/16	11/32	7/16	1/2	9/16				.094	.125	.156
CT310AD	480	55	370	7/16	1/2	9/16	5/8	11/16	3/4			.125	.156	.187
CT310AE	600	68	370	7/16	1/2	9/16	5/8	11/16	3/4			.125	.156	.187
CT310AF	750	85	300	1/2	9/16	5/8	11/16	3/4	7/8			.156	.187	.219
CT310BJ	1050	120	215	5/8	11/16	3/4	7/8	15/16	1.0	1 1/8	1 1/4	.187	.219	.250
CT310BK	1330	150	170	5/8	11/16	3/4	7/8	15/16	1.0	1 1/8	1 1/4	.219	.250	
CT310AN	1775	200	320	5/8	11/16	3/4	7/8	15/16	1.0	1 1/8	1 1/4	.219	.250	
CT310AP	3100	350	240	5/8	11/16	3/4	7/8	15/16	1.0	1 1/8	1 1/4	.250		
CT310AQ	5100	575	180	5/8	11/16	3/4	7/8	15/16	1.0	1 1/8	1 1/4	.250		

Example of Complete Tool Model Number:

CT310AG 750 G 187T

- 187T — Hex Key Size (Table 1)
- G — Extended Socket Length (Table 2)
- 750 — Hex Socket Size (Table 1)
- CT310AG — Tool Model Number

Table 2

Ext'd.Socket Length

Code	Extension
B	.250 "
D	.500 "
E	.625 "
G	1.0"
J	2.0"
L	3.0"

90º Angle Head Tools

Installation Hand Tools
and
Hex Keys Accessories

SECTION 5

Arconic Fastening Systems

ARCONIC

Hand Assembly Tools For Frangible Collars

Small Roller Wrenches, 40 & 80 in-lbs

Roller Wrenches With Square Drive

Part Number	Max Torque	Socket Drive	Hole Thru Dia.
RWB100-40	40 in-lbs	1/4"	.119
RWB100-80	80 in-lbs	1/4"	.119
RWBO100-40	40 in-lbs	1/4"	.119
RWBO100-80	80 in-lbs	1/4"	.119

Hand Assembly Tools For Frangible Collars

Medium Roller Wrench with 3/8" Sq. Drive

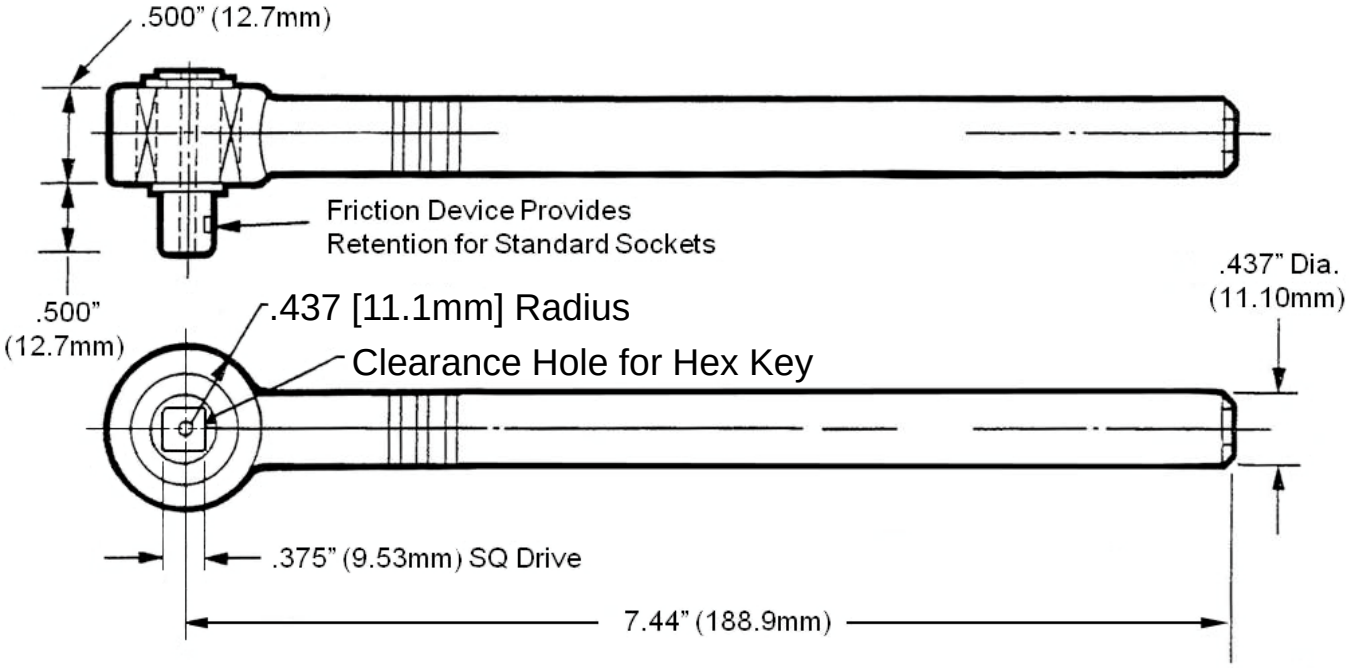

Roller Wrench With Square Drive

Ordering Number	Max Torque	Socket Sq. Drive	Hole Thru Dia.
RWB100-150-375	150 in-lbs	3/8"	.231 .236

Hand Assembly Tools For Frangible Collars

Medium Roller Wrench with Integrated Sockets

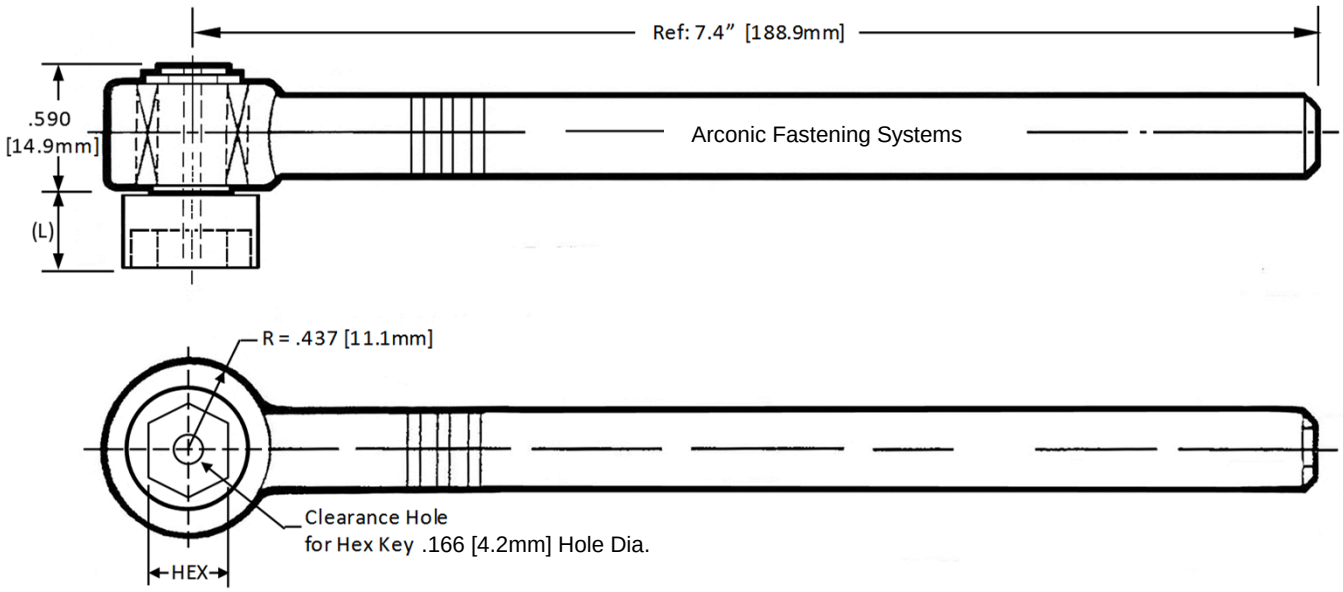

Ordering Number	Hex Size		L	Hole Thru Dia.
RWB130A-31	.312	5/16"	.250	.166
RWB130A-34	.343	11/32"	.270	.166
RWB130A-37	.375	3/8"	.370	.166
RWB130A-43	.437	7/16"	.430	.166

- Designed to fit into limited access applications
- Will install frangible collars requiring 150 in-lbs [17Nm] of applied torque

Hand Assembly Tools For Frangible Collars

Lt. Duty Roller Wrenches with Integrated Sockets

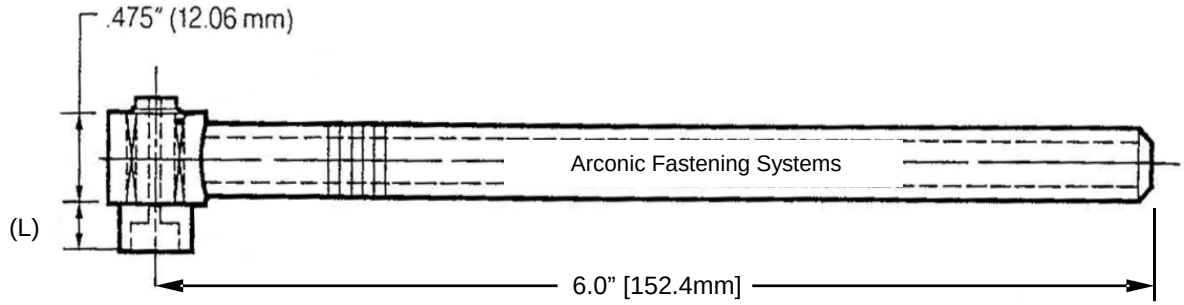

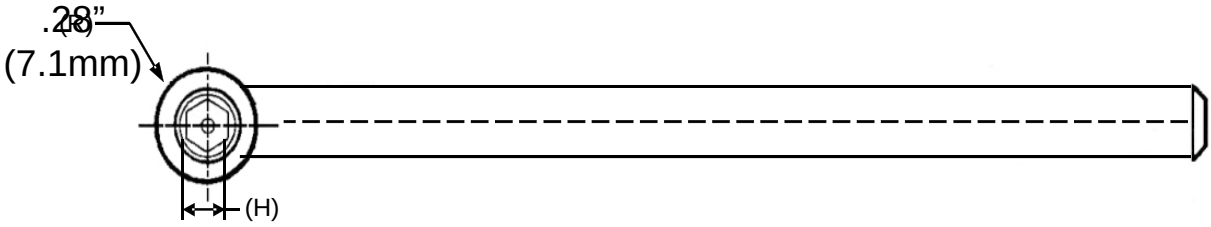

Ordering Number	(H) Hex Size		L	Hole Thru Dia.
RWB40A-21	.219	7/32"	.240	7/32"
RWB40A-25	.250	1/4"	.240	7/32"
RWB40A-28	.281	9/32"	.240	7/32"
RWB40A-31	.312	5/16"	.250	7/32"
RWB40A-34	.343	11/32"	.270	7/32"

- Maximum 40 in-lbs Torque Capability
- Designed to fit into limited access applications
- Do not exceed maximum torque capability of the roller wrench

Hand Assembly Tools For Frangible Collars

Lt. Duty Roller Wrenches with Integrated Sockets

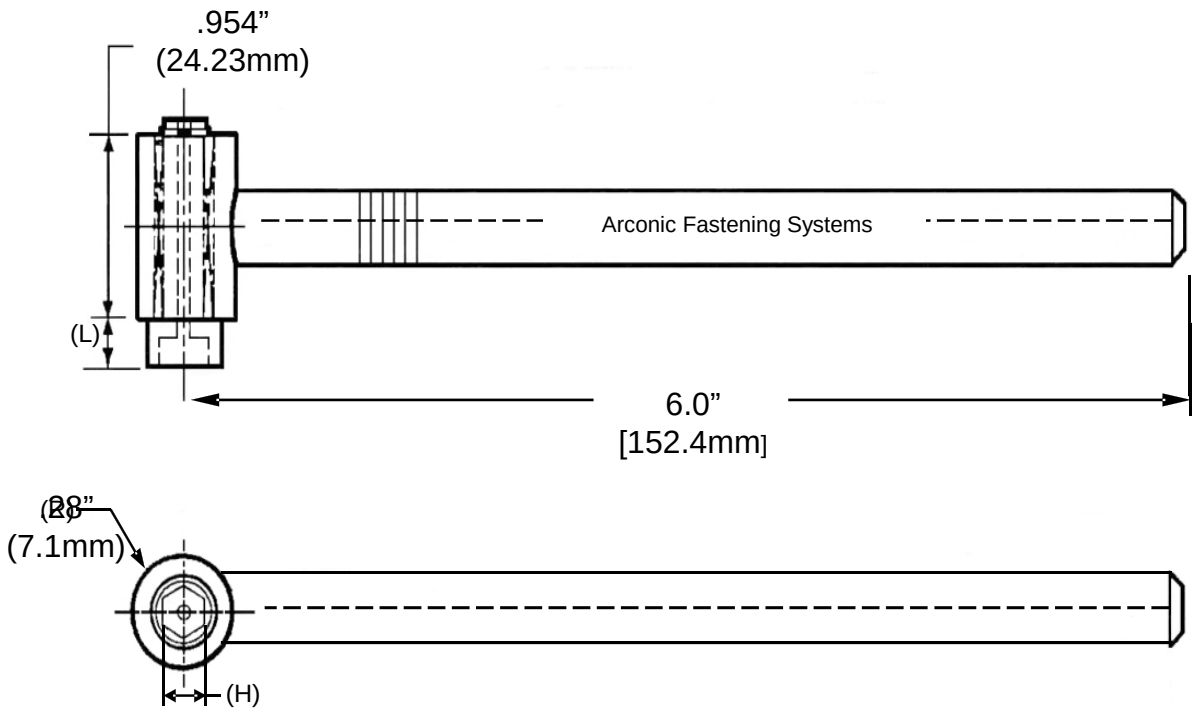

Ordering Number	(H) Hex Size		L	Hole Thru Dia.
RWB80A-21	.219	7/32"	.240	7/32"
RWB80A-25	.250	1/4"	.240	7/32"
RWB80A-28	.281	9/32"	.240	7/32"
RWB80A-31	.312	5/16"	.250	7/32"
RWB80A-34	.343	11/32"	.270	7/32"

- Maximum 80 in-lbs Torque Capability
- Designed to fit into limited access applications
- Do not exceed maximum torque capability of the roller wrench

Hand Assembly Tools For Frangible Collars

Roller Wrench, up to 400 in-lbs

Ordering Number	A Ref.	Handle Length Ref.	C Dia. Ref.	D Max.	Square Drive	Hole Thru Dia.
RWB100-400	2.0	8.0	1.5	.74	3/8"	1/8"

Notes:

1. Sockets are not included with the Roller Wrench
2. Hex Key Handle Assembly sold separately

Hand Assembly Tools For Frangible Collars

Roller Wrench, up to 400 in-lbs

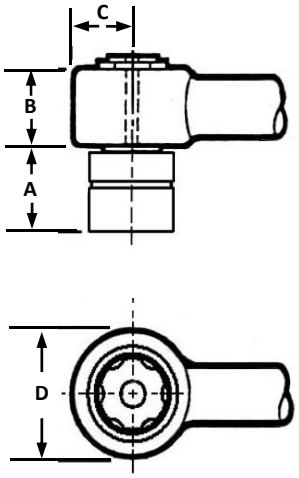

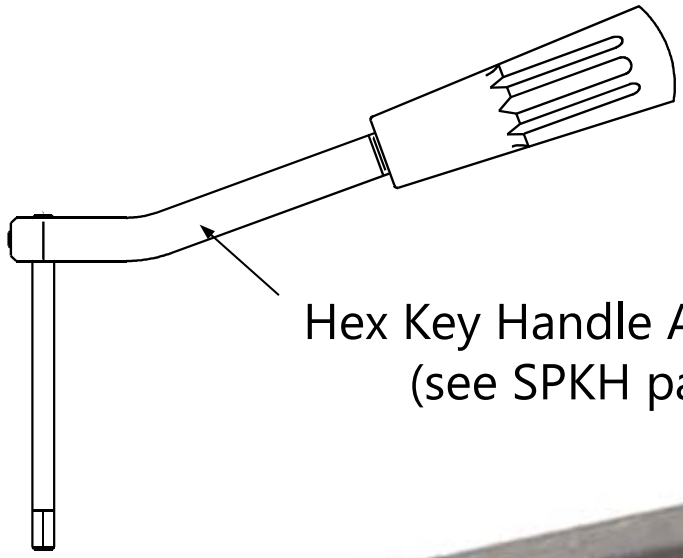

Ordering Number	Hex Size	A Length Ref.	B Height Ref.	C Radius Max.	D Dia. Ref.	Handle Length Ref.	Hole Thru Dia.	Square Drive
RWB100-400-37	.375	1.25	.785	.74	1.5	8.0	1/8"	3/8"
RWB100-400-50	.500	1.25	.785	.74	1.5	8.0	1/8"	3/8"
RWB100-400-56	.562	1.25	.785	.74	1.5	8.0	1/8"	3/8"

Notes:

1. Socket is included with this Roller Wrench
2. Hex Key Handle Assembly sold separately

Hand Assembly Tools For Frangible Collars

SPKH –Special Hex Key Handle

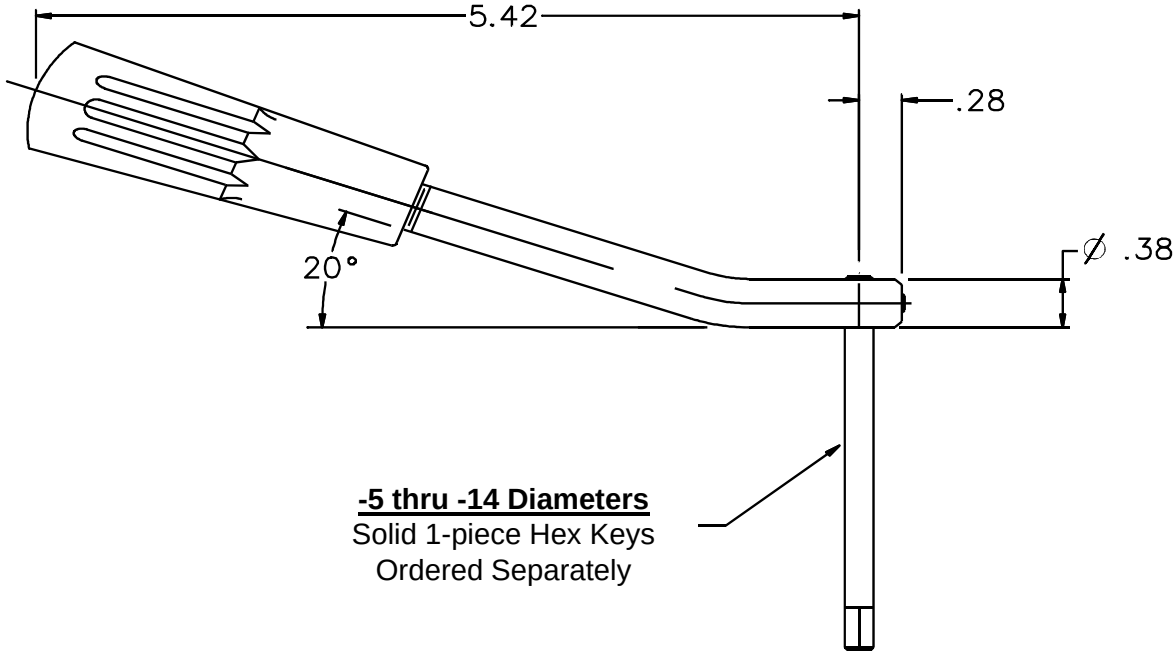

Hex Keys

Pin Dia.	Handle (20º)	Handle (Straight)	Hex Key Size	Hex Keys Choices	
				.825 Long	2.5" Long
-5	SPKH-6	SPKH-6S	.078 (5/64")	093-9322	093-9323
-6	SPKH-6	SPKH-6S	.078 (5/64")	093-9322	093-9323
-8	SPKH-8	SPKH-8S	.094 (3/32")	093-9324	093-9325
-10	SPKH-10	SPKH-10S	.125 (1/8")	016-9867	016-9868
-12	SPKH-12	SPKH-12S	.156 (5/32")	016-9869	016-9870
-14	SPKH-14	SPKH-14S	.187 (3/16")	216-9008	216-9009

How to Order:

1. Order Handle Assembly Separately: SPKH-(*)

2. Order Hex Keys Separately

Hand Assembly Tools For Frangible Collars

Extra Strong Hex Keys to be used for manual installation and removal of fasteners

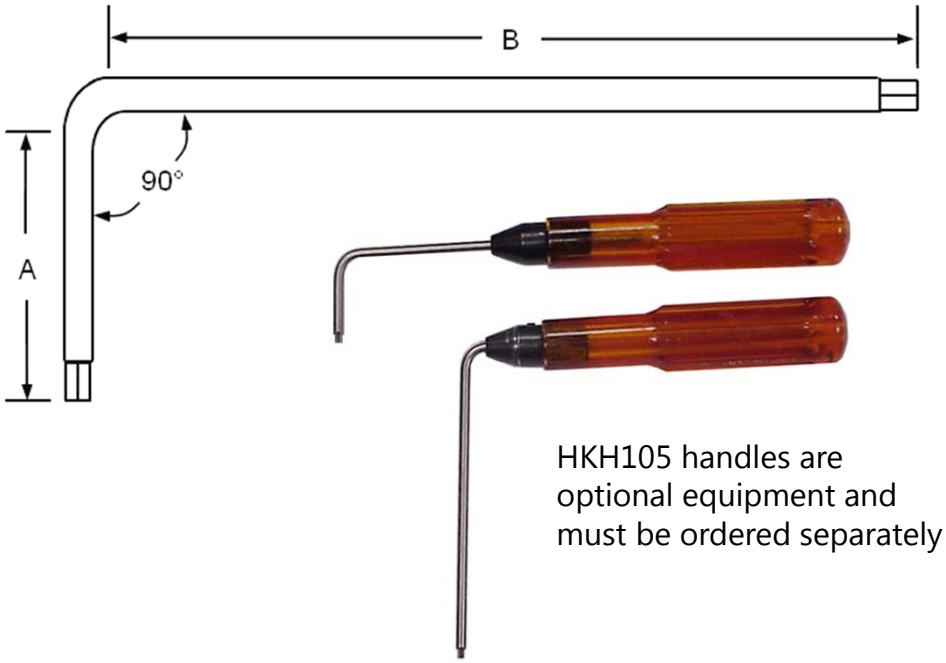

Hex Key Part Number	Handle Part Number (Optional)	Screw Dia.	Hex Size	"A" Reference (inches)	"B" Reference (inches)
HK650-078-1	HKH105-078	-5, -6	5/64" (.078)	0.50	3.20
HK650-078-2	HKH105-078	-5, -6	5/64" (.078)	0.75	3.20
HK650-078-3	HKH105-078	-5, -6	5/64" (.078)	2.09	4.45
HK650-094-1	HKH105-094	-8	3/32" (.094)	0.50	3.50
HK650-094-2	HKH105-094	-8	3/32" (.094)	0.75	3.25
HK650-094-3	HKH105-094	-8	3/32" (.094)	2.09	4.45
HK650-125-4	Not Available	-10	1/8" (.125)	1.25	5.25
HK650-125-3	Not Available	-10	1/8" (.125)	2.40	4.10
HK650-156-3	Not Available	-12	5/32" (.156)	2.40	4.10
HK650-156-4	Not Available	-12	5/32" (.156)	1.25	5.25

Material: High Strength Alloy Steel

Caution: Do not use these hex keys with power installation tooling

Hand Assembly Tools For Frangible Collars

Roller Wrenches, up to 400 in-lbs

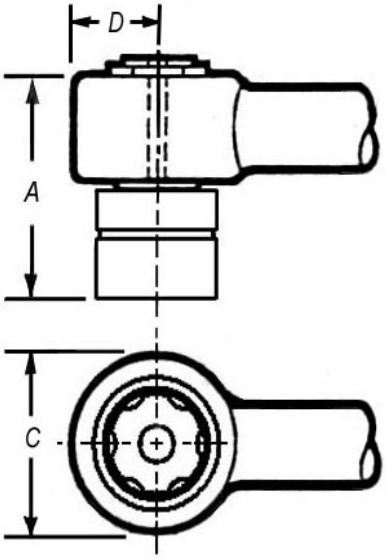

YSA Standard Collars

YSA 351, 352, 353, 361, 362, 363

Collar Dia.	Hex Size (mm)	Socket Part Number	Roller Wrench	Socket Drive	"A" (mm)	"C" (mm)	Socket Length	Hex Key (Metric)	Hex Key Handle, Type 1	Hex Key Handle, Type 2
-4	6	CTSM-6-1	RWB100-80	1/4"	49.8	7.1	22.2mm	HK660-M1.5-1	HKHM-1.5	HKH100
-4	6	CTSM-6-2	RWB100-80	1/4"	76.8	7.1	49.2mm	HK660-M1.5-2	HKHM-1.5	HKH100
-5	7	CTSM-7-1	RWB100-80	1/4"	49.8	7.1	22.2mm	HK660-M2-1	HKHM-2.0	HKH100
-5	7	CTSM-7-2	RWB100-80	1/4"	76.8	7.1	49.2mm	HK660-M2-2	HKHM-2.0	HKH100
-6	8	CTSM-8-1	RWB100-150-375	3/8"	39.0	11.2	25.4mm	HK660-M2.5-1	HKHM-2.5	HKH100
-6	8	CTSM-8-2	RWB100-150-375	3/8"	66.0	11.2	50.8mm	HK660-M2.5-2	HKHM-2.5	HKH100
-8	10	CTSM-10-1	RWB100-400	3/8"	45.3	15.9	25.4mm	HK660-M3-1	HKHM-3.0	HKH100
-8	10	CTSM-10-2	RWB100-400	3/8"	70.7	15.9	50.8mm	HK660-M3-2	HKHM-3.0	HKH100

Metric Hex Keys For Frangible Collars

Extra Strong Metric Keys to be used for manual installation and removal of fasteners

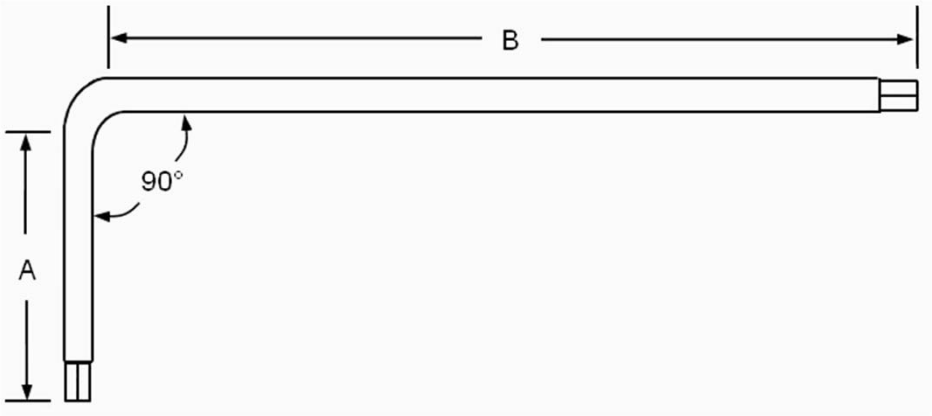

Part Number	Bolt Dia.	Hex Size	"A" Reference		"B" Reference	
			In	mm	In	mm
HK650-M1.5-1	-4	1.5mm	1.0"	25.4	5.7"	147.3
HK650-M1.5-2	-4	1.5mm	2.5"	63.5	4.3"	109.2
HK650-M1.5-3	-4	1.5mm	3.3"	83.8	3.5"	88.9
HK650-M2-1	-5	2.0mm	1.0"	25.4	5.7"	147.3
HK650-M2-2	-5	2.0mm	2.5"	63.5	4.3"	109.2
HK650-M2-3	-5	2.0mm	3.3"	83.8	3.5"	88.9
HK650-M2.5-1	-6	2.5mm	1.0"	25.4	5.8"	147.3
HK650-M2.5-2	-6	2.5mm	2.0"	50.8	4.8"	121.9
HK650-M2.5-3	-6	2.5mm	3.0"	76.2	3.8"	96.5
HK650-M3-1	-8	3.0mm	1.2"	30.5	5.6"	142.0
HK650-M3-2	-8	3.0mm	2.2"	55.8	4.6"	116.8
HK650-M3-3	-8	3.0mm	3.2"	81.3	3.6"	91.4

Material: High Strength Alloy Steel

Caution: Do not use these hex keys with power installation tooling

Handle for Forged Metric Hex Keys

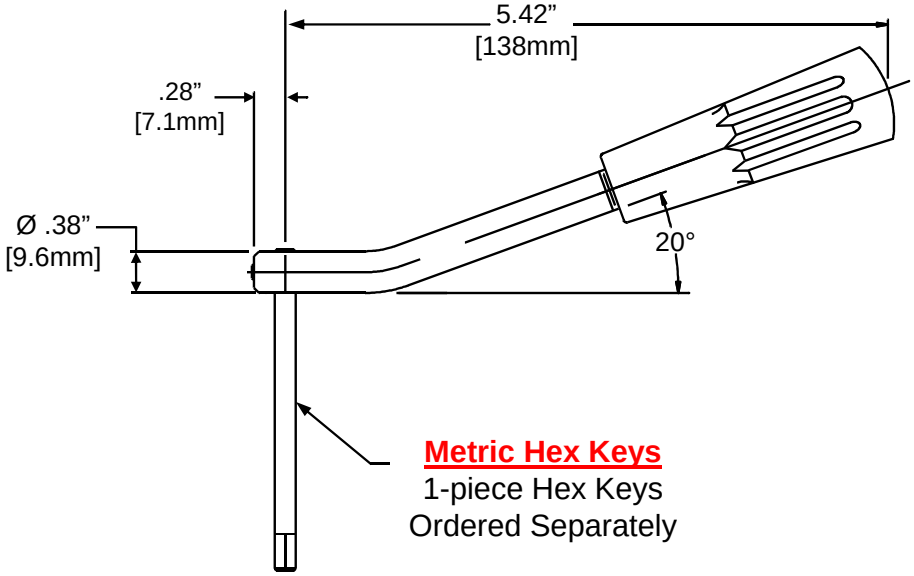

This is an economical handle for holding forged Metric Size Hex Keys. This handle is comfortable to hold and the hex keys are retained by a standard set screw. This handle and key assembly are ideal for manually installed nuts or frangible collars on pins with a metric size hex recess.

The hex keys come in a standard length of 3.0” [76.2mm] and can be shortened for tighter fit applications.

Type 1 Handle

Handle Part Number	Hex Key Part Number	Description	Collar Dia.	Hex Key Length
HKHM-1.5	HK660-M1.5-1	Hex Key 1.5mm	-4	2.5" [63.5mm]
HKHM-1.5	HK660-M1.5-2	Hex Key 1.5mm	-4	3.3" [85.6mm]
HKHM-2.0	HK660-M2-1	Hex Key 2.0mm	-5	2.5" (63.5mm)
HKHM-2.0	HK660-M2-2	Hex Key 2.0mm	-5	3.3" [85.6mm]
HKHM-2.5	HK660-M2.5-1	Hex Key 2.5mm	-6	2.0" [50.8mm]
HKHM-2.5	HK660-M2.5-2	Hex Key 2.5mm	-6	3.0" [76.2mm]
HKHM-3.0	HK660-M3-1	Hex Key 3.0mm	-8	2.2" [55.9mm]
HKHM-3.0	HK660-M3-2	Hex Key 3.0mm	-8	3.2" [81.3mm]

Handle for Forged Aster™ Keys

This is an economical handle for holding Aster ™ keys. This handle is comfortable to hold and the keys are retained by a standard set screw. This handle and key assembly are ideal for manually installed nuts or frangible collars on pins with the Aster ™ recess.

The keys come in a standard length of 3.0" [76.2mm] and can be shortened for tighter fit applications.

Caution: **To avoid injury, do not use this wrench design with power installation tooling**

Ordering Numbers	Description	Aster™ Key Length
HKH100	Handle	3.0" (76.2mm)
AK650-2-B	Aster™ Key for -2 Dia. Pin	3.0" (76.2mm)
AK650-3-B	Aster™ Key for -3 Dia. Pin	3.0" (76.2mm)
AK650-3A-B	Aster™ Key for -3A Dia. Pin	3.0" (76.2mm)
AK650-4-B	Aster™ Key for -4 Dia. Pin	3.0" (76.2mm)

Note: Aster™ is a trademark of Blanc Aero Industries

Length of the Aster™ Key can be adjusted to fit application requirements

Aster ™ Key Accessories For Nuts and Frangible Collars

Extra Strong Aster ™ Keys to be used for manual installation and removal of fasteners

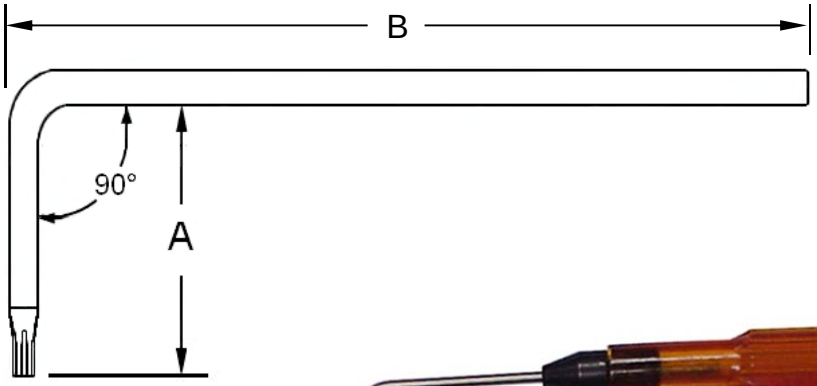

Aster ™ Recess Shape

AKH105 handles are optional equipment and must be ordered separately

Aster ™ Key is not formed on both ends

Hex Key Part Number	Handle Part Number (Optional)	Screw Dia.	"A" Reference (mm)	"B" Reference (mm)
AK650-2-16	AKH105-2	-2	16.0	85.0
AK650-3-16	AKH105-3	-3	16.0	85.0
AK650-3A-16	AKH105-3A	-3A	16.0	85.0
AK650-4-17	AKH105-4	-4	17.0	85.0

Material: High Strength Alloy Steel

Caution: Do not use this product with a power tool, serious injury can occur.

Aster ™ Key Accessories For Nuts and Frangible Collars

Extra Strong Aster ™ Keys to be used for manual installation and removal of fasteners

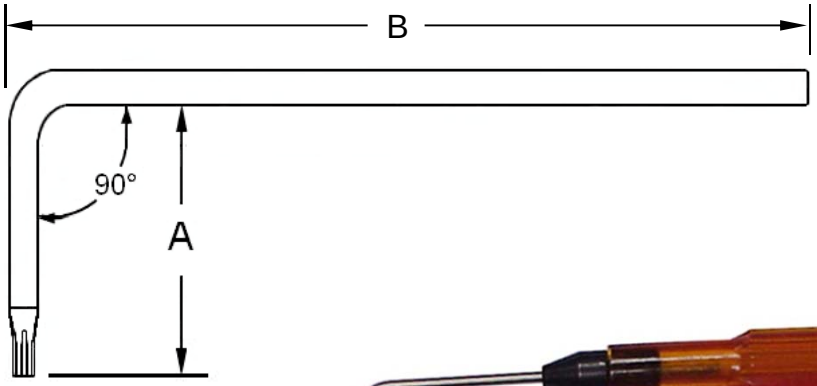

Aster ™ Recess Shape

AKH105 handles are optional equipment and must be ordered separately

Aster ™ Key is not formed on both ends

Hex Key Part Number	Handle Part Number (Optional)	Screw Dia.	"A" Reference (mm)	"B" Reference (mm)
AK650-2-16	AKH105-2	-2	16.0	85.0
AK650-3-16	AKH105-3	-3	16.0	85.0
AK650-3A-16	AKH105-3A	-3A	16.0	85.0
AK650-4-17	AKH105-4	-4	17.0	85.0

Material: High Strength Alloy Steel

Caution: Do not use this product with a power tool, serious injury can occur.

Frangible Collars Tools

Collar Removal Tools
Pneumatic and Hand Tools

SECTION 6

Arconic Fastening Systems

ARCONIC

Hand Removal Tool For Frangible Collars

Crow Foot Removal Wrenches

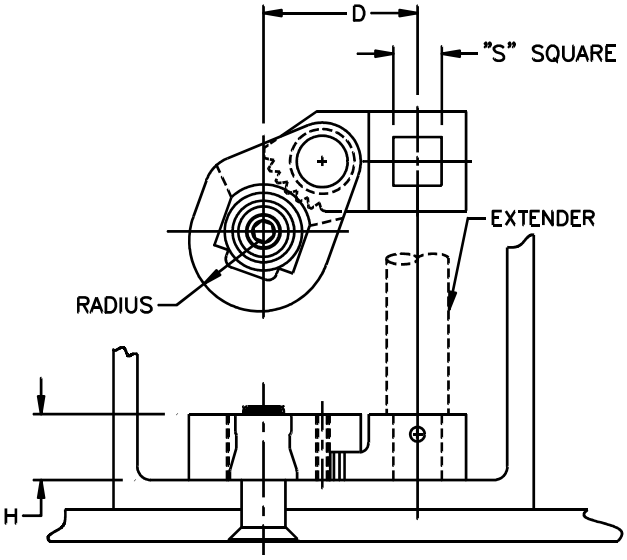

Features:

- **Crows foot jaw securely grips frangible collars for their easy removal in restricted areas**
- **Tool is made of heat treated high grade steel**
- **Various lengths, user provided, extenders permit tool usage in deep channels**

Part Number	Collar Usage	Edge Radius	"S" Square	H	D
RT100-56CF	-5, -6	.280	.25	0.28	1.010
RT100-8CF	-8	.350	.25	0.38	1.170
RT100-10CF	-10	.430	.375	0.47	1.450
RT100-12CF	-12	.430	.375	0.47	1.450
FT100-14CF	-14	.610	.375	0.57	1.800

Hand Removal Tool For Frangible Collars

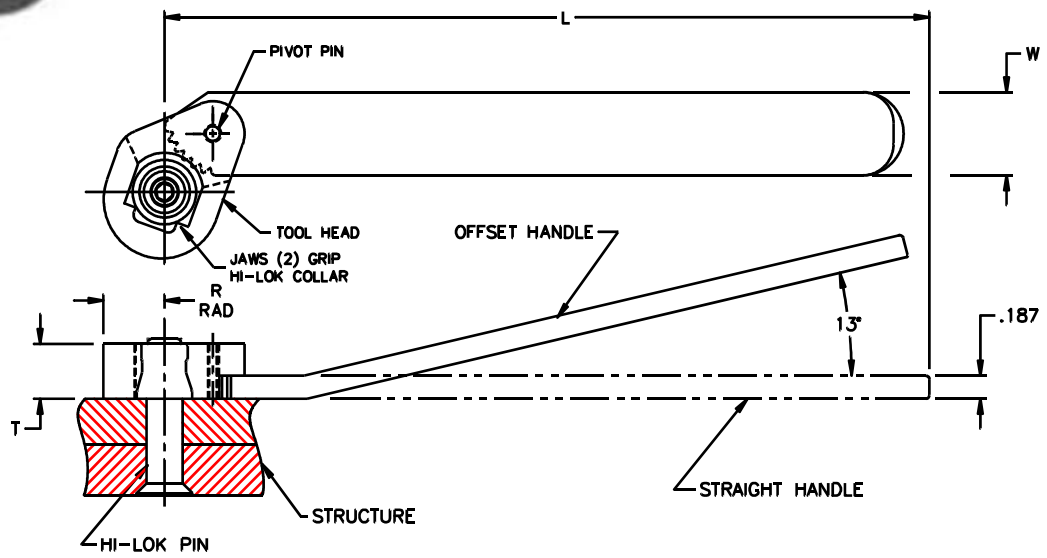

FEATURES:

- ***SERRATED REMOVAL TOOL SECURLY GRIPS FRANGILBLE COLLARS FOR EASY REMOVAL***
- ***TOOL IS AVAILABLE WITH AN OFFSET OR STRAIGHT HANDLE***

Removal Tool Offset Handle

Part Number	Collar Diameter	R	T	L	W
RT100-56	-5, -6	.280	.28	5.6"	.42
RT100-8	-8	.350	.38	5.8"	.55
RT100-10	-10	.430	.47	6.9"	.67
RT100-12	-12	.430	.47	6.9"	.67
RT100-14	-14	.610	.57	9.9"	.95

Removal Tool Straight Handle

Part Number	Collar Diameter	R	T	L	W
RT100-56S	-5, -6	.280	.28	5.6"	.42
RT100-8S	-8	.350	.38	5.8"	.55
RT100-10S	-10	.430	.47	6.9"	.67
RT100-12S	-12	.430	.47	6.9"	.67
RT100-14S	-14	.610	.57	9.9"	.95

Hand Removal Tool For Frangible Collars

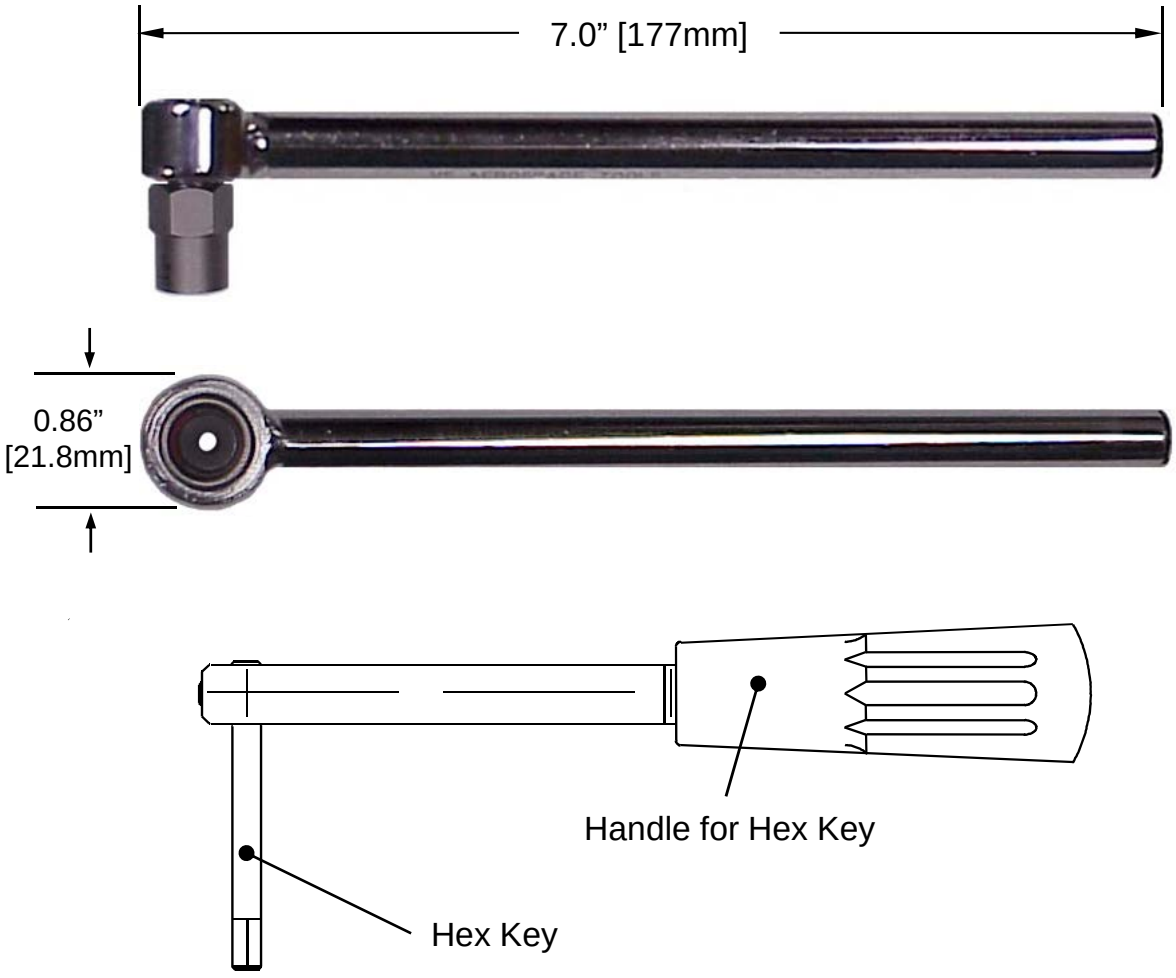

Roller Wrench Removal Tools for Frangible Collars

Collar Dia.	Removal Socket	Roller Wrench	Hex Key Size	Hex Key Bit 2.5" Long	Handle for Hex Key Bit
(-5) 5/32"	CRTS9000-5	RT9001-375	.062 (1/16")	TBD	SPKH-5S
(-5) 5/32"	CRTS9000-5	RT9001-375	.078 (5/64")	093-9323	SPKH-6S
(-6) 3/16"	CRTS9000-6	RT9001-375	.078 (5/64")	093-9323	SPKH-6S
(-8) 1/4"	CRTS9000-8	RT9001-375	.094 (3/32")	093-9325	SPKH-8S

Hand Removal Tool For Frangible Collars

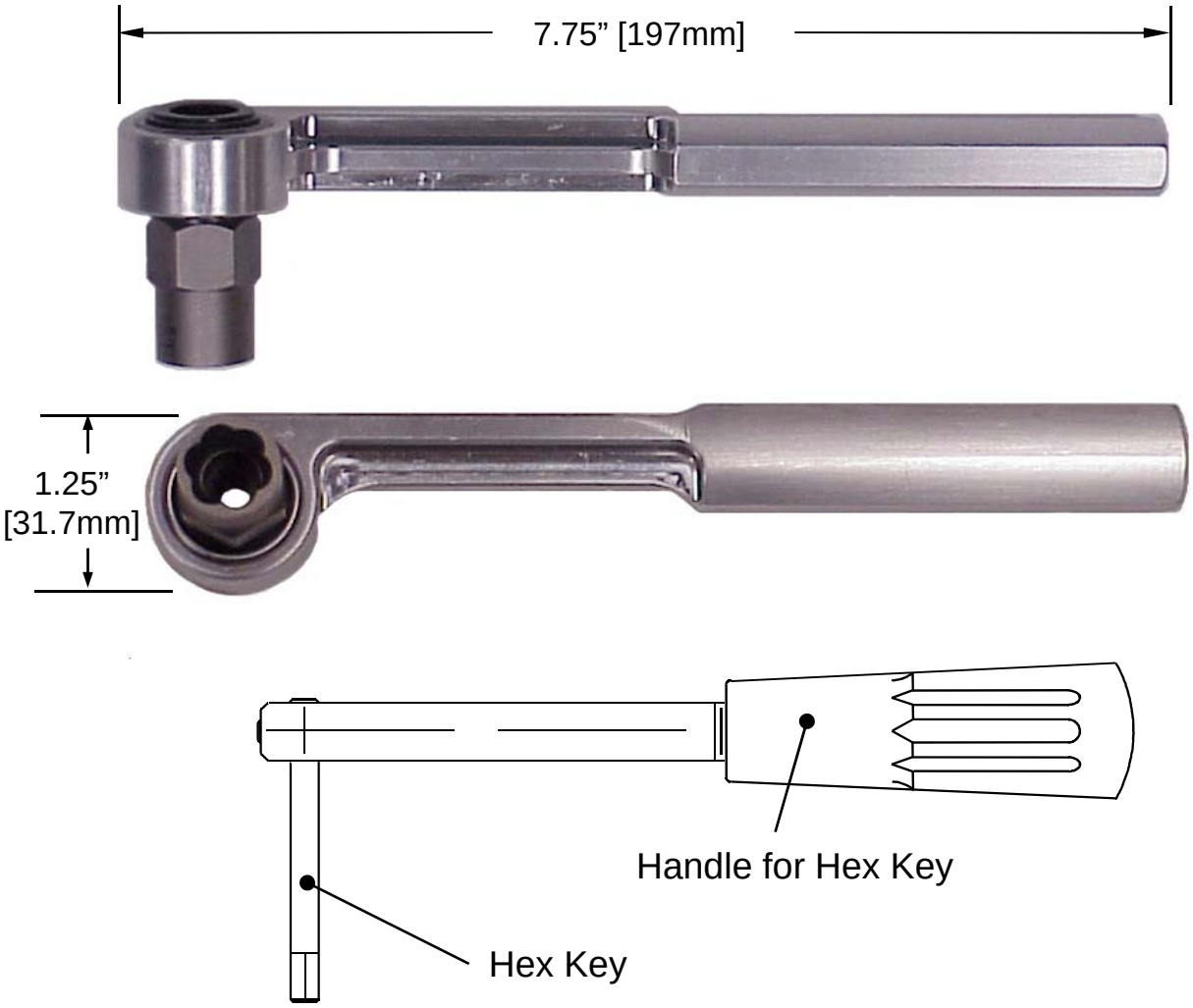

Roller Wrench Removal Tools for Frangible Collars

Collar Dia.	Removal Socket	Roller Wrench	Hex Key Size	Hex Key Bit 2.5" Long	Handle for Hex Key Bit
(-8) 1/4"	CRTS9000-8	RT9000-375	.094 (3/32")	093-9325	SPKH-8S
(-10) 5/16"	CRTS9000-10	RT9000-375	.125 (1/8")	093-9008	SPKH-10S
(-12) 3/8"	CRTS9000-12	RT9000-375	.156 (5/32")	TBD	SPKH-12S

Hand Removal Tool For Frangible Collars

Procedure for removing frangible collars:

1. Select the correct size removal socket for the fastener that will be removed.
2. Attach the appropriate size removal socket to the ratchet wrench or roller wrench.
3. Place the removal socket over the frangible collar that you want to remove and apply a moderate amount of down pressure. Turn the socket in a counter-clockwise direction to loosen the collar.
4. If the “screw” or “pin” is not tight and turns with the collar when you attempt loosen it, you will need the appropriate size hex key to hold the “pin” from turning while you rotate the nut. The hex key will fit through the ratchet wrench and socket and fit into the hex recess of the “pin”.
5. Removing the socket from the collar can be difficult. Before the collar is completely removed from the “pin” it is recommended to wiggle the socket which will detach it from the collar. You should be able to remove the collar by hand at this time.

ARCONIC

Arconic Fastening Systems

Assembly Tool Systems Division

801 S. Placentia Avenue
Fullerton, CA USA 92831
714-278-8908 Telephone
714-871-4821 FAX