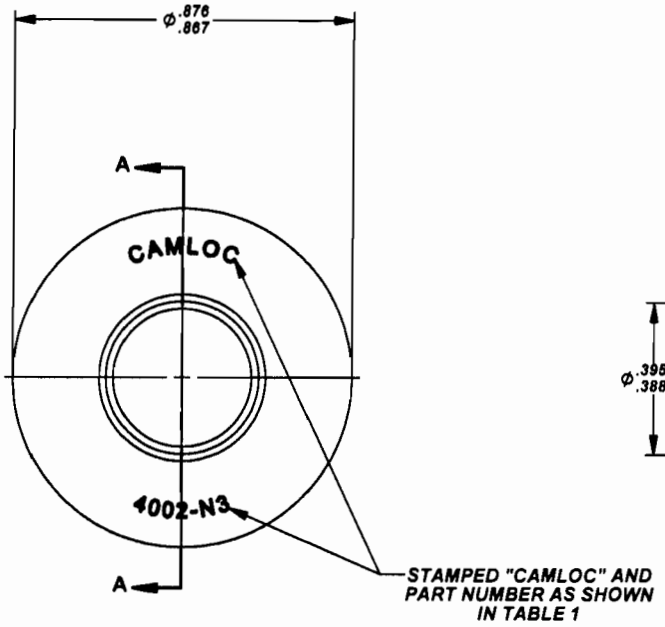

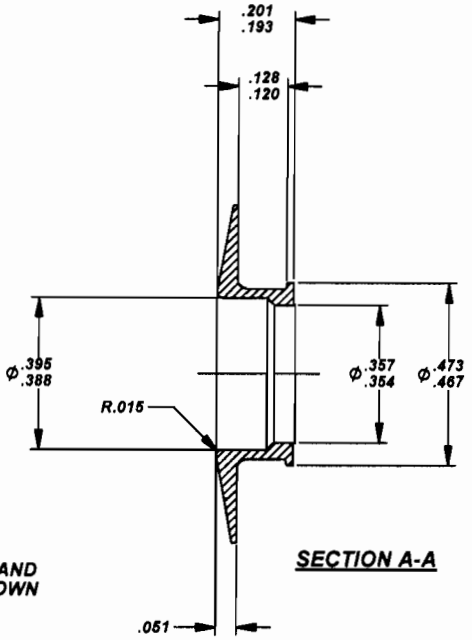

SECTION A-A

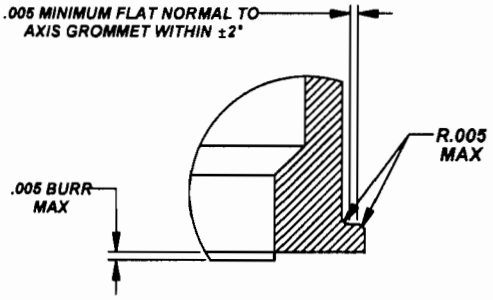

DETAIL - B

TABLE 1

PART NUMBER	MATERIAL	FINISH	WEIGHT LBS/100
4002-N3	CARBON STEEL PER ASTM A108	CADMIUM PLATE PER AMS-QQ-P-416, CLASS 2, TYPE II	.60
4002-N3-A	300 CRES SERIES PER ASTM A582	PASSIVATE PER AMS2700, TYPE 2	
4002-N3-B	CARBON STEEL PER ASTM A108	ZINC PLATE PER ASTM B633, CLASS 5, TYPE II (YELLOW CHROMATE)	

NOTES; UNLESS OTHEWISE SPECIFIED:

1. FOR INSTALLATION PROCEDURE, SEE CAMLOC CATALOG, 4002 SERIES.
2. ALL EDGES BROKEN .005 MAXIMUM AND ALL FINS AND BURRS REMOVED EXCEPT WHERE OTHERWISE NOTED.

MANUFACTURE OF THE PROPRIETARY PARTS SHOWN HERE WITHOUT WRITTEN CONSENT OF ALCOA FASTENING SYSTEMS IS ABSOLUTELY PROHIBITTED.

THIS DRAWING EMBODIES A CONFIDENTIAL, PROPRIETARY DESIGN & ALL DESIGN, MANUFACTURING PRODUCTION, USE & SALE RIGHTS REGARDING SAME ARE EXPRESSLY RESERVED

APPROVED DATE 19 MAR 98	CURRENT REGIAN ACTIVITY: Alcoa Fastening Systems & Rings ALCOA	TITLE: GROMMET, PLUS FLUSH Ø.875 FLANGE	CURRENT DESIGN ACIVITY: 71286
REV. LETTER AND DATE N 16 NOV 15	CAMLOC PRODUCTS 3012 W. LOMITA BLVD. TORRANCE, CA 90505-5103		SALES DRAWING NO. 4002-N3
DAF NUMBER DAF 112940		UNLESS OTHERWISE SPECIFIED DIMENSIONS ARE IN INCHES & ASME Y14.5M TOLERANCES: ANGLES = ±3° DECIMALS .XX = ±.02 .XXX = ±.010	SHEET 1 OF 1

S44297