TABLE I (A)	
CATALOG PART NO.	FINISH
26R3-1	ANODIZE PER MIL-A-8625 (ASG) TYPE II (B)
26R3-3	HARDCOAT PER AMS 2468-1 (ALUMILITE, REF: .001 THK) (1)(2)(F)

STOCK	REV.	CHANGE
OK	A	(A) ADDED INT COL & MFG TO TABLE I (1) ADDED ALL OVER (2) WAS .750±.003 (3) WAS .375±.006 (4) ADDED .097-.103 (5) ADDED .116-.122 (6) WAS (2) HOLES .096-.098 DIA (7) ADDED .050 R (8) ADDED NOTE 2 (9) ADDED SEE TABLE I. WERNER 7-15-65
OK	B	(B) 26R3-2 & REL. TABLE DELETED (C) WAS .500-.520 (D) ADDED ALUMILITE TO FIN. NOTE (E) WAS .518-.580 WERNER
OK	C	(C) ADDED SIDE VIEW (1) ADDED 2° TYP (2) RELOCATED .085 DIM (3) WAS .510-.490 (4) ADDED .057-.063 (5) WAS .080 R. RANDALL 4-8-57
OK	D	(D) MADE PICTURE CHANGE BROBYLS 8-27-58
OK	E	REDRAWN WITH CHANGES (ADDED MAT'L SPEC; .097-.103 SLOT WAS .093-.103) REID 6-4-65 J.K.M.
OK	F	(F) "2468-1" WAS "2468-3" & .001 WAS .003" (G) WAS "AL ALLOY, PER QQ-A-591, COMP. 7, (REF: ALLOY #218)

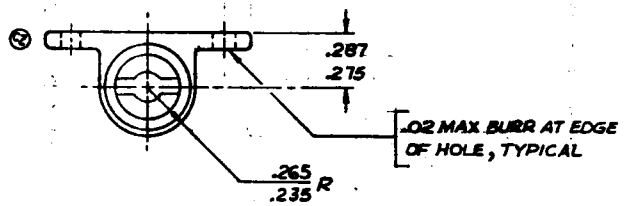

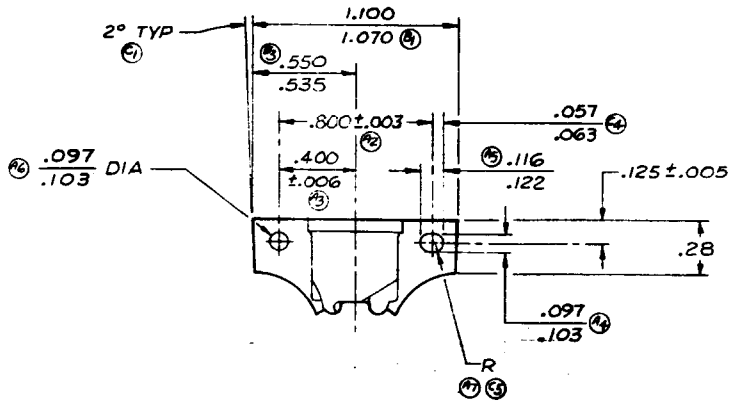

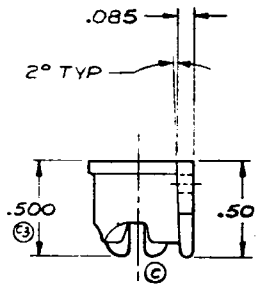

26R3

F

ACTUAL SIZE

(2) PRECAUTIONARY MEASURES MUST BE TAKEN WHEN RIVETING THIS RECEPTACLE DUE TO SMALL EDGE DISTANCE.

1. FOR INSTALLATION DATA, SEE CAMLOC DWG NO. 26F9.

NOTES:

SEE TABLE I.	2:1	
	CAMLOC	3-3-55
	J. MARCUS	4-14-55
		4-21-55
	A.W.F.	5-6-55

CAMLOC FASTENER CORPORATION
PARAMUS, NEW JERSEY

RECEPTACLE - SIDE MOUNTING, 2 HOLE

2600 | 26R3 | F

CODE IDENT NO. 71985

Document : 26R3 Rev. F
Date Created: Friday, 25 April, 2014 01:57:14 PM
001ds32173_1_0.pdf