001ds1005_1_0.pdf
Date Created: Wednesday, 05 February, 2014 03:05:56 PM Document : SFR5902()()(D)L(R) SERIES Rev. D

NOTICE:
PRODUCT DIMENSIONS NOTED ON THIS DRAWING ARE PROVIDED FOR ENVELOPE AND INSPECTION PURPOSES ONLY AND DO NOT INCLUDE DIMENSIONS NECESSARY FOR FABRICATION OF THIS PRODUCT.

DWG NUMBER
SFR5902( )( )(D)L(R)
SERIES
INSP - INSTL

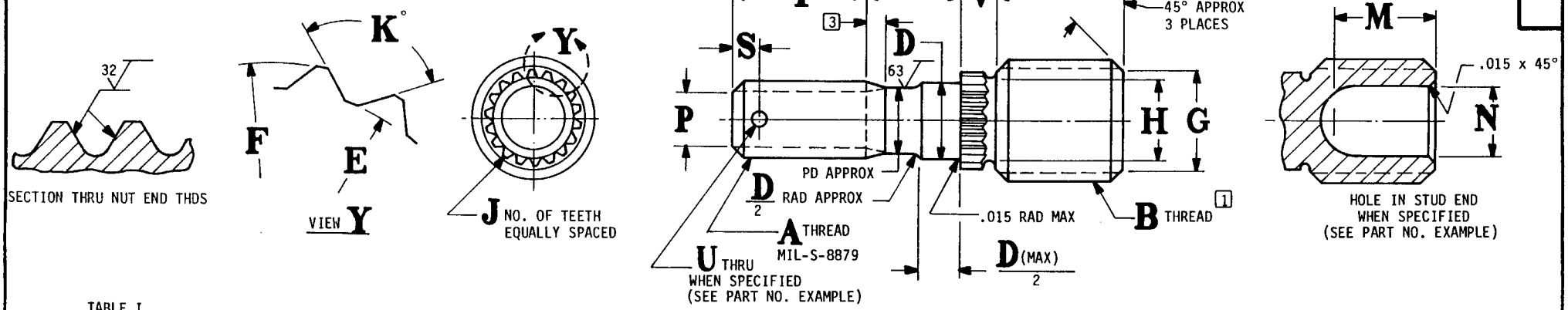

TABLE I

SIZE CODE (SEE PART NO. EXAMPLE)			A NUT END THREAD	B STUD END THREAD [1]			C ±.010 SIZE CODE			D DIA	E DIA	F DIA	G DIA	H DIA	J	K°	M REF SIZE CODE			N DIA	P DIA	S	T	U DIA	V	LOCKRING REF (ORDER SEPARATELY)	
500	640	800	UNJF-3A	THD SIZE	PITCH DIA	MINOR DIA	500	640	800		+.005 -.004	+.007 -.002	+.000 -.015	MIN		+2° -1°	500	640	800		±.010	±.015	±.015	+.005 -.002	±.015	CARBON STEEL [4]	A-286 CRES [5]
502	642	802	.190-32	.375-24	.3512 .3497	.3271 .3185	.386	.433	.511	.189 .186	.255	.284	.318	.233	17	86°	.181	.226	.339	.202	.137	.120	.469	.067	.142	RLRR1997-103	RLRR1997E103
503	643	803	.250-28	.4375-20	.4084 .4067	.3795 .3700	.486	.558	.673	.249 .246	.316	.345	.370	.294	20	102°	.239	.311	.465	.205	.190	.160	.594	.067	.155	RLRR1997-104	RLRR1997E104
504	644	804	.3125-24	.500-20	.4711 .4694	.4422 .4325	.627	.725	.868	.312 .309	.380	.407	.432	.357	24	102°	.345	.443	.617	.222	.242	.160	.688	.067	.200	RLRR1997-105	RLRR1997E105
505	645	805	.375-24	.625-18	.5927 .5910	.5606 .5498	.762	.893	1.076	.374 .371	.456	.487	.549	.433	26	102°	.471	.602	.828	.324	.305	.170	.750	.096	.200	RLRR1997-106	RLRR1997E106
506	646	806	.4375-20	.750-16	.7134 .7114	.6773 .6656	.808	.948	1.155	.437 .433	.567	.601	.665	.535	26	111°	.488	.628	.835	.438	.354	.170	.812	.096	.200	RLRR1997-107	RLRR1997E107
507	647	807	.500-20	.875-14	.8328 .8308	.7916 .7786	.883	1.038	1.267	.499 .495	.687	.721	.778	.645	30	111°	.503	.658	.928	.470	.416	.190	.875	.096	.255	RLRR1997-108	RLRR1997E108
508	648	808	.625-18	1.000-12	.9503 .9478	.9022 .8878	1.153	1.364	1.656	.624 .620	.783	.820	.887	.741	30	111°	.728	.939	1.231	.476	.532	.220	1.000	.128	.255	RLRR1997-109	RLRR1997E109

REFER TO SHEET 2 OF 3 FOR NOTES.

REFER TO SHEET 3 FOR INSTALLATION DATA.

LTR	CHANGES	DATE
D	SEE EN	84.02.06 T.L.
C	SEE EN	83-03-21
B	SEE EN	83-05-17 DM
A	RLSE FOR ENGRG	82.08.12 F.M.

UNLESS OTHERWISE SPECIFIED
ALL DIMENSIONS ARE IN INCHES
TOLERANCE
DECIMALS .XXX ± .005 .XX ± .015
ANGLES ± 2°
DIAMETERS TO BE CONCENTRIC WITHIN .006 FIM
DRAWING SYMBOLS AND TOLERANCE PER ANSI Y14.5
SURFACE ROUGHNESS PER ANSI B46.1

DRAWN	FRANCOIS	82-08-12
CHECKED	do	82-08-16
DESIGNED	THD	82-08-12
APPROVED	T.DO	82-08-16

MATERIAL: SEE SHEET 2 TABLE III AND TABLE IV
HEAT TREAT: SEE SHEET 2 TABLE III & TABLE IV
FINISH: SEE SHEET 2 TABLE III & TABLE IV

Rexnord Rosán Products
P.O. Box 25225 • Santa Ana, CA 92799 USA

STUD - LOCKED IN, RING LOCKED, SERRATED, HIGH STRENGTH, OVERSIZE REPLACEMENT

SIZE B | FSCM NO. 83324 | DWG NUMBER SFR5902( )( )(D)L(R) SERIES INSP - INSTL

SCALE: NONE | RDP8401-024 | SHEET 1 OF 3

FORM 80 223

001ds19035_1_0.pdf
Date Created: Wednesday, 05 February, 2014 03:05:56 PM Document : SFR5902()()(D)L(R) SERIES Rev. D

NOTICE:
PRODUCT DIMENSIONS NOTED ON THIS DRAWING ARE PROVIDED FOR ENVELOPE AND INSPECTION PURPOSES ONLY AND DO NOT INCLUDE DIMENSIONS NECESSARY FOR FABRICATION OF THIS PRODUCT.

DWG NUMBER
SFR5902( )( )(D)L(R)
SERIES
INSP - INSTL
SHEET 2

PART NUMBER EXAMPLE:

SFR5902 C 643 D 24 R

- BASIC PART NUMBER — SFR5902
- MATERIAL CODE (SEE TABLE III & IV) — C
- SIZE CODE (THREAD COMBINATION AND SIZE, SEE TABLE I) — 643
- DRILLED HOLE IN NUT END WHEN SPECIFIED (USE DASH IF NO HOLE DESIRED) — D
- "L" LENGTH IN 1/16 INCH INCREMENTS (SEE TABLE II). (24/16 = 1.500) — 24
- RECESS IN STUD END WHEN SPECIFIED (LEAVE BLANK IN LIEU OF "R" FOR NO RECESS) — R

TABLE II: TABULATED LENGTHS (NUT END)

DASH NO. (**)	L NUT END ±.015	GRIP LENGTH REF FOR BASIC NUT END THREAD SIZE SHOWN .1900	.2500	.3125	.3750	.4375	.5000	.6250
-8	.500	(*)						
-9	.562	(*)	(*)					
-10	.625	(*)	(*)					
-11	.688	.219	(*)	(*)				
-12	.750	.281	(*)	(*)	(*)			
-13	.812	.343	.218	(*)	(*)			
-14	.875	.406	.281	(*)	(*)			
-15	.938	.469	.344	.250	(*)	(*)		
-16	1.000	.531	.406	.312	.250	(*)	(*)	
-17	1.062	.593	.468	.374	.312	.250	(*)	
-18	1.125	.656	.531	.437	.375	.313	.250	(*)
-19	1.188	.719	.594	.500	.438	.376	.313	(*)
-20	1.250	.781	.656	.562	.500	.438	.375	(*)
-21	1.312	.843	.718	.624	.562	.500	.437	.312
-22	1.375	.906	.781	.687	.625	.563	.500	.375
-23	1.438	.969	.844	.750	.688	.626	.563	.438
-24	1.500	1.031	.906	.812	.750	.688	.625	.500
-25	1.562	1.093	.968	.874	.812	.750	.687	.562
-26	1.625	1.156	1.031	.937	.875	.813	.750	.625
-27	1.688	1.219	1.094	1.000	.938	.876	.813	.688
-28	1.750	1.281	1.156	1.062	1.000	.938	.875	.750
-29	1.812	1.343	1.218	1.124	1.062	1.000	.937	.812
-30	1.875	1.406	1.281	1.187	1.125	1.063	1.000	.875
-31	1.938	1.469	1.344	1.250	1.188	1.126	1.063	.938
-32	2.000	1.531	1.406	1.312	1.250	1.188	1.125	1.000
-34	2.125	1.656	1.531	1.437	1.375	1.313	1.250	1.125
-36	2.250	1.781	1.656	1.562	1.500	1.438	1.375	1.250
-38	2.375	1.906	1.781	1.687	1.625	1.563	1.500	1.375
-40	2.500	2.031	1.906	1.812	1.750	1.688	1.625	1.500
-42	2.625	2.156	2.031	1.937	1.875	1.813	1.750	1.625
-44	2.750	2.281	2.156	2.062	2.000	1.938	1.875	1.750

(*) HAS NO "D" SHANK.
"T" DIMENSION WILL TERMINATE WITHIN 3 PITCHES OF SERRATED COLLAR.

(**) DASH NUMBER PARTS BELOW HEAVY LINE HAVE LENGTH OF SHANK "D" EQUAL TO "D" MAX/2 AND DASH NUMBER PARTS ABOVE HEAVY LINE HAVE LENGTH OF SHANK "D" SHORTER THAN "D" MAX/2.

TABLE III: MATERIAL SELECTION

SIZE CODE	MATERIAL CODE A	B	C	D	E
500		X		X	X
640	X		X		X
800	X		X		X

TABLE IV: MATERIAL CODE

MATERIAL CODE	MATERIAL	HEAT TREAT	FINISH
A	8740 STEEL (MIL-S-6049)	160-180 KSI UTS	CAD PLATE (QQ-P-416, TYII, CL3)
B	8740 STEEL (MIL-S-6049)	180-200 KSI UTS	CAD PLATE (AMS2401)
C	A-286 CRES (AMS5731 OR AMS5734)	140 KSI UTS MIN	DESCALED AND CLEANED (ASTM-A380-78)
D	718 CRES (AMS5662)	180 KSI UTS MIN	DESCALED AND CLEANED (ASTM-A380-78)
E	6AL-4V TITANIUM (MIL-T-9047, COMP 6)	160 KSI UTS MIN	NONE

NOTES: UNLESS OTHERWISE SPECIFIED

1. THE STUD END THREAD HAS A SPECIAL PITCH DIA AND MINOR DIA WHICH INSTALLS INTO A MIL-S-8879 TAPPED HOLE.
2. SURFACE ROUGHNESS: MACHINED SURFACES TO BE 125 MICROINCHES IN ACCORDANCE WITH ANSI B46.1 EXCEPT SERRATED COLLAR.
3. MAXIMUM 2 INCOMPLETE THREADS.
4. LOCKRING RLRR1997-( ) SERIES IS 1117 CARBON STEEL (ASTM A108), 36-45 HRC, CAD PLATED PER QQ-P-416, TYII, CL3.
5. LOCKRING RLRR1997E( ) SERIES IS A-286 CRES (AMS5731 OR AMS5734), 269 HB MIN, PASSIVATED PER QQ-P-35.
6. FILLETS: .030 RAD MAX.
7. EDGES: EDGES BROKEN .003-.015.

LTR	CHANGES	DATE
D	SEE SHEET 1	89.02.06 T.L.

UNLESS OTHERWISE SPECIFIED
ALL DIMENSIONS ARE IN INCHES
TOLERANCE
DECIMALS .XXX ± .005 .XX ± .015
ANGLES ± —
DIAMETERS TO BE CONCENTRIC WITHIN — FIM
DRAWING SYMBOLS AND TOLERANCE PER ANSI Y14.5
SURFACE ROUGHNESS PER ANSI B46.1

DRAWN	FRANCOIS	82.08-12
CHECKED	do	82-08-16
DESIGNED	THD	82-08-12
APPROVED	T.DO	82-08-16
MATERIAL	—	
HEAT TREAT	—	
FINISH	—	

Rexnord Rosán Products
P.O. Box 25225 • Santa Ana, CA 92799 USA

STUD - LOCKED IN, RING LOCKED, SERRATED, HIGH STRENGTH, OVERSIZE REPLACEMENT

SIZE B | FSCM NO. 83324 | DWG NUMBER SFR5902( )( )(D)L(R) SERIES INSP - INSTL

SCALE: NONE | SHEET 2

FORM 80-223

Date Created: Wednesday, 05 February, 2014 03:05:56 PM Document : SFR5902()()(D)L(R) SERIES Rev. D

NOTICE:
PRODUCT DIMENSIONS NOTED ON THIS DRAWING ARE PROVIDED FOR ENVELOPE AND INSPECTION PURPOSES ONLY AND DO NOT INCLUDE DIMENSIONS NECESSARY FOR FABRICATION OF THIS PRODUCT.

DWG NUMBER
SFR5902( )( )(D)L(R)
SERIES
INSP - INSTL
SHEET 3

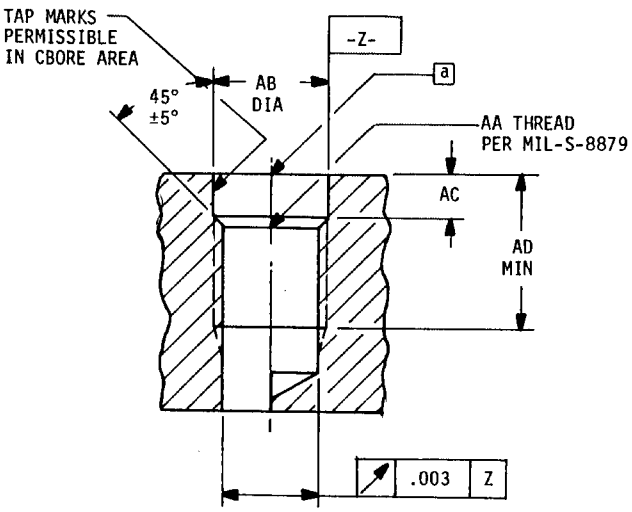

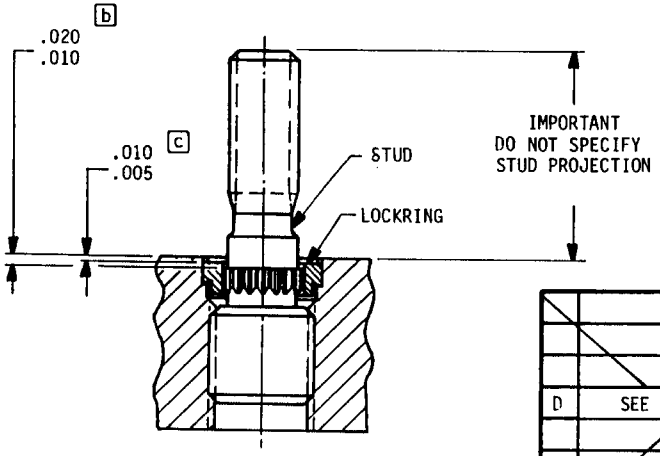

TABLE III: HOLE PREPARATION DATA

SIZE CODE			AA THREAD CLASS 3B	AB DIA	AC	AD MIN FULL THD DEPTH			TOOLING		
500	640	800		+.005 -.000	+.015 -.000	500	640	800	STEP DRILL [d]	DRIVE WRENCH	LOCKRING DRIVE TOOL
502	642	802	.3750-24UNJF	.390	.122	.436	.483	.561	SDC390JF	R1105W	SFR5902-3D
503	643	803	.4375-20UNJF	.453	.151	.536	.608	.723	SDC453JF	R1106W	SFR5902-4D
504	644	804	.5000-20UNJF	.515	.174	.677	.775	.918	SDC515JF	R1107XW	SFR5902-5D
505	645	805	.6250-18UNJF	.625	.174	.812	.943	1.126	SDC625JF	R1108W	SFR5902-6D
506	646	806	.7500-16UNJF	.750	.178	.858	.998	1.205	SDC750JF	R1110W	SFR5902-7D
507	647	807	.8750-14UNJF	.875	.230	.953	1.088	1.317	SDC875JF	R1111W	SFR5902-8D
508	648	808	1.0000-12UNJF	1.000	.230	1.203	1.414	1.706	SDC1000JF	R1112W	SFR5902-9D

INSTALLATION PROCEDURE:

a. AXIS OF HOLE TO BE NORMAL TO ENTRY SURFACE OR PROVIDE SPOTFACE WHEN REQUIRED.

b. INSTALL INSERT TO DEPTH SHOWN.

c. DRIVE LOCKRING TO DEPTH SHOWN.

d. STEP DRILLS ARE DESIGNED FOR THRU HOLE DRILLING. WHEN USED TO DRILL A BLIND HOLE, IT MAY BE NECESSARY TO GRIND THE DRILL TO SUIT THE DEPTH REQUIRED.

e. THESE STUDS ARE PRIMARILY DESIGNED FOR USE IN SOFT MATERIALS (ALUM, MAG, ETC). FOR USE IN HARDER MATERIALS, CONTACT ROSAN, INC. ENGINEERING DEPARTMENT.

LTR	CHANGES	DATE
D	SEE SHEET 1	89.01.06 T.L.

UNLESS OTHERWISE SPECIFIED
ALL DIMENSIONS ARE IN INCHES
TOLERANCE
DECIMALS .XXX ±.005 .XX ±.015
ANGLES ± —
DIAMETERS TO BE CONCENTRIC WITHIN ——— FIM
DRAWING SYMBOLS AND TOLERANCE PER ANSI Y14.5
SURFACE ROUGHNESS PER ANSI B46.1

DRAWN	FRANCOIS	82-08-12
CHECKED	do	82-08-16
DESIGNED	THD	82-08-12
APPROVED	T. DO	82-08-16
MATERIAL	———	
HEAT TREAT	———	
FINISH	———	

Rexnord Rosán Products
P.O. Box 25225 • Santa Ana, CA 92799 USA

STUD - LOCKED IN, RING LOCKED, SERRATED, HIGH STRENGTH, OVERSIZE REPLACEMENT

SIZE B | FSCM NO. 83324 | DWG NUMBER SFR5902( )( )(D)L(R) SERIES INSP - INSTL

SCALE: NONE | SHEET 3

FORM 80 223